Masters-2001

Build a Baldwin 8-16-D 2-6-0

A Locomotive Adventure
By David Fletcher
Melbourne, Australia

Chapter 7 -The Tender:

The Locomotive Fuel Tank

Background - Construction - Detail

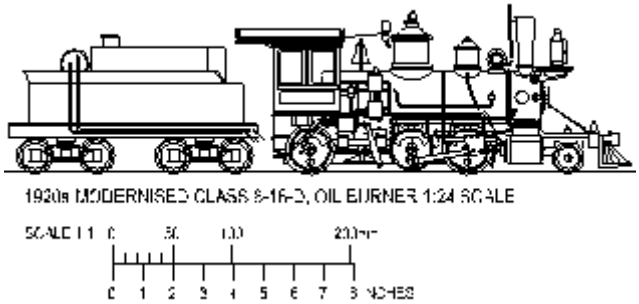

She's ALIIIIIIIIIVE!

This is the penultimate chapter, and the locomotive Semi-final. Chaps we've come a long way and the end is nigh! At the end of this chapter your locomotive is finished, but will not be actually born until the builder's plates are installed in Chapter 8.

Here is the prototype model used for this class, shown complete with tender and all fittings. She's also been given her builder's plates as part of chapter 8...She's...ALIIIIIIIIIVE!!!!

She's my new friend, but is very shy, so a little quiet if you please....

Oh come on lil lady, turn around and show us your face!...told you she was shy!

There that's much better....

The 8-16-D 2-6-0 in all her glory, finished after 8 months and hundred of pages of photos and text! Sorry Shad, but you must really hate me by now! The lil lady however wishes to thank you, as do I. It sure has been a lot of work. For every single day of modeling that went into the loco, there was another 2-3 days of writing required.

At the end of this chapter, your loco will look something like above, without decals or builder's plates.

Those of you who have been going to this MasterClass to enjoy the 'Background' sections only (You know who you are!!), can now see where this model was headed....so go back to Chapter 1 and get building! Welcome to Rob, getting washed out in Southern Oregon and welcome also to Norm. You will enjoy building this 2-6-0, whether you like it or not!

The Tender

This week, with the construction of the tender, the locomotive is basically finished, fully detailed and operational. After this chapter, there is only one more chapter to come. Chapter 8, is the final chapter and is a summing up, covering some aspects of testing, weighting your loco and applying the builder's plates and decals. The model is however visually finished in this chapter 7.

Background

This is the last background section covering locomotive technology and history. We look at aspects of the tender including style and construction methodology.

Construction

We finally get around to building a tender for our 8-16-D in this chapter. Those of you purchasing a ready to run tender will have little to do in this chapter other than to apply some of the tender pipe-work and details.

As stated in Chapter 1, some appropriate commercial tenders that can be used for this lil 2-6-0 are:

- The Bachmann 2-4-2 tender
- The H-L-W small 'Princess' tender
- The AMT 'General' kit tender

But it's a whole lot more fun making your own tender. We cover the scratch building of a fully detailed tender from styrene. The basic style and shape of the tender described is based on 1870s principles. This same tender found service with the 8-16-D 2-6-0 through to retirement. Hence the 1870s tender is appropriate for 1930s versions of the 2-6-0 with only minor modification. Those doing 20.3 scale models of the 2-6-0, can simply widen and raise the tender height to the appropriate 20.3 size...or produce a tender of your own design, following the construction techniques outlined in this chapter. Consider 4 wheel tenders also for the 20.3 version.

Its is a common fault. The tender is usually the last item to be made during a loco construction. There is the tendency to rush in this late stage of work. The reason? You have a locomotive that is essentially finished except for the tender. The desire to throw any old tender onto the loco and get out and run her is high. The best advice is to take it easy, take a cold shower and put as much effort and energy into making a good tender as you did for the locomotive proper. The tender has as much importance to the model as any other major system. Indeed the tender can give the loco heaps of character. Don't rush, work carefully and enjoy the modeling. You'll have plenty of time to run your loco soon and what fun it'll be knowing the tender as well as the loco is perfect.

Detail

The construction of the tender will be the same for all versions. In the detail section we cover the additional details required to place the tender in the desired time period. We look at hungry boards for the 1870s wood tender. Coal supplies for the coal version and the construction of an oil tank for later era 2-6-0s.

The Export 2-6-0

The 8-16-D 2-6-0 was a successful light narrow gauge Mogul. Many were built for NG lines all over the US between 1875 and 1880. Baldwin, always mindful of the export dollars, marketed this little mogul to foreign lands. Look carefully in the pictures of South American lines and occasionally you might find an 8-16-D or two. Pictured below is a very fine example of the Export 2-6-0. This 2-6-0 named "S.Fancisco de Paula" was built for the Brazilian RR in 1881 (a couple of years after the last of this class were sold within the US). Take a long and hard look at this little mogul.

Drawing from the lessons of the previous 6 chapters, you can extract a lot about the design of this loco. Check it out.

- Rounded domes, a very modern style applied to this 1881 loco. This styling would not become widely accepted in the US until the late 1880s.
- Piston water pumps as well as injectors. The best of both systems employed on the one loco, notice the two feed water lines and two boiler relief valves to the side of the loco.
- No air brakes
- Oil cups on the steam chests, this loco has no Hydrostatic lubricator.
- Radley Hunter stack, loco was probably a wood burner. Coal spark arrestors were usually a different shape.
- Oil Head lamp
- Next Generation equalizers to the last two drivers. This is the equalizer more typical of later era locos. The equalizing beam is above the wheels, and connected to the springs above the drivers, rather than lashed to the axle bearings themselves as demonstrated on our 2-6-0.

What else can you see?

Background

(Ex loco Scientia)
From the locomotive- Knowledge

Getting Excited about Tenders

The tender is the fuel wagon for the locomotive design to store a balanced mix of solid fuel and water. Solid fuels were usually in the form of wood, coal or oil. In some case, some rather nasty flammable greases were also used in industrial applications, extracted as 'by-products' from the industrial processes.

Some background.

The tender's origin goes back to the very first steam locomotive ever built. The 0-4-0 built by Richard Trevithick in 1803 had a tender, so by default one could claim Richard also invented the tender. I suspect the tender idea predates that somehow. Somehow the image of horse towing a cart loaded with supplies, matches Trevithick's Iron horse towing foot plate and fuel wagon.

Coal had been the primary fuel for steam engines well before Trevithick's loco. The abundance of coal in the UK, as well as the large stationary steam engines being used to pump water from the coal mines was the reason for coal being the primary fuel since the very beginning.

In the US, the story was very different. In Canada as well as mainland US, wood had been the primary locomotive fuel. The reason in part was the larger distances traveled. Wood supplies could be provided along the line, whereas coal had to be brought in from distant places. The first experiments with coal in the US were made around 1858-1860. It wasn't until the 1870s that coal became generally used. The increasing sizes of the locos with increasing distances traveled made the use of wood too inefficient.

Typically a 'cord' of wood was a stack of wood of proportion 8'x4'x4'. In the 1830s-1840s, a 'cord' of wood could fuel a loco for around 36 miles of level track. By 1859, through the increases of technology and more efficient boilers, a 'cord' or wood could run a loco to a distance of 50 miles. By the 1870s, 50 miles was considered a 'short' distance, and many 'cords' of wood were required to run the trains many hundreds of miles.

Anyone having ridden behind a real wood burning locomotive will know just how quickly wood is burned up. Running the 1875 4-4-0 Eureka up grade from Durango to Silverton required one and a half to two tender loads of wood for the 25 mile trip.

The early tenders were typically a timber framed flat car with a wood sided fuel compartment and a large barrel placed atop the tender for the water supply. Slowly the water tank and fuel compartment were integrated into one box like unit.

Typically the balance of fuel to water was 1/3 :2/3 or a third of the storage within the tender was for fuel, while 2/3 was filled with water. By the 1870s the US tender was basically a 'U' shape in plan, with the fuel compartment in the 'U' center and the water running in a tank around the fuel compartment in a 'U' shape.

The 1870s -Tender Construction

By the 1870s tenders were essentially a sheet iron box atop a wooden decked flat car.

The Rounded Corners

The 1870s -1880s tenders usually had rounded corners. This detail would also be found on the very last steam locos built in the US. The rounded corners, apart from being very 'stylish', were developed for practical reasons. It is difficult to rivet plates of iron together to the extend that they are water tight. It is even more difficult to rivet sheets together in a corner detail and maintain the joint as water tight. Thus the rounded corner evolved. The sheets of iron are riveted together on the flat, the sheet metal is then bent round the corner, providing a rounded, water tight corner, with no riveted joints on the curve at all.

The rounded corners to the tender sheeting. 1875 Baldwin 4-4-0, Eureka.
Note also in this photo the bolted cleat to the rear of the tender, used to fix the tender tank down to the timber flatcar chassis.

The rounded tender corners on INYO. Note the rivet lines adjacent to the corners, riveting the sides of the tender no the flat. Note the added details also, such as the tool box and the hooks on the rear. The hooks could be used to store ropes, re-railing poles and other appliances.

Internal Construction

The tender tanks were usually iron boxes with little internal bracing. A tender full of water could at times seem to be bulging. Look at an old empty tender in the right light and you'll probably see the metal sides 'rippled'. This photo of the empty tender of NCNG #5 illustrates the rippled tender sheeting.

If this tender was to be filled with water, the ripples would most likely 'pop' back to a smooth side.

Internally the tenders were minimally braced with horizontal 'T' section iron. You can usually determine the number and location of 'T' section braces by the placement of zig-zag rivet lines on the outside of the tender.

There are two rows of zig-zag rivet heads running horizontally across the tender sides. The upper row runs past the top of the '191', while the lower line of rivets run along the lower edge of the '191'. This indicates that there are two horizontal runs of 'T' bracing within to help prevent the tender from bulging under the water pressure. This tender is a classic 1880s tender built for the D&RG, Class 60/C-16...you can see the old paint work on this tender, denoting #225. #225 was a Class 60 built by Grant Locomotive Works. The #191 painted on top indicates the 2nd life of this tender, running behind DSP&P 2-8-0 #191. The South Park become the Denver, Leadville and Gunnison in 1889, and later was bought out by the UP before become part of the C&S. This tender had quite some life...but I don't know when the 191 acquired this tender. The circular rust hole below the '1' in the '191' provides a peep hole to view the interior of this tender, lets take a look at the innards:

Who would be crazy enough to stuff their lens though a rust hole in an old tender...ME! And aren't you glad I did? Look at this beautiful construction...this is just fabulous! You can clearly see the two horizontal rows of 'T' section bracing riveted to the tender sheeting. Make a visual allowance for the curved distortion in the view...I took the shot with a 16mm Fisheye lens. You can clearly see the vertical rivet jointing between the rear and side of the tender, well back from the curved corner. You can see the open, oval water hatch at the upper left. To the right you can see the rear of the wood bunker, with two 'T' braces on the end....and a nasty rust hole at the

bottom. This tender will never hold water again! Along the bottom are more 'T' section bracing, badly rusted. Just think back in the 1880s, in the mountainous wilds of Colorado, there are stories of Wanted Gunmen climbing into locomotive tenders and hiding out, up to their necks in water.

Note the single horizontal line of rivets in the 1873 tender. This tender only had one horizontal brace. Our 8-16-d 2-6-0 is constructed along similar lines, with only one horizontal brace. Look at those stylish tender trucks! Yes this style of truck is available in large scale. This type of truck was originally made by Kalamazoo! Seek some out, you might be able to use them on your 2-6-0. Note also on this tender the tool box on the top deck behind the flare near the front. Tool boxes were placed here for the convenience of the crew. As locomotives become more reliable, the tool boxes became smaller, until no tool boxes were provided on the tender.

Tender Styles

Lets take a bit of a walk through some tender styles appropriate to our 2-6-0.

A neat 1870s Baldwin 4-4-0, with cute little 4 wheel tender. Note the height of the tender deck relative to the cab. This would be typical of US tenders up to around 1900. The tender tops were

usually set at around the lower cab window sill, providing the crew with an unobstructed rearward view. You can imagine when these little tender were piled with wood, that clear view would be somewhat diminished. It was not uncommon for the wood load to reach the cab roof!

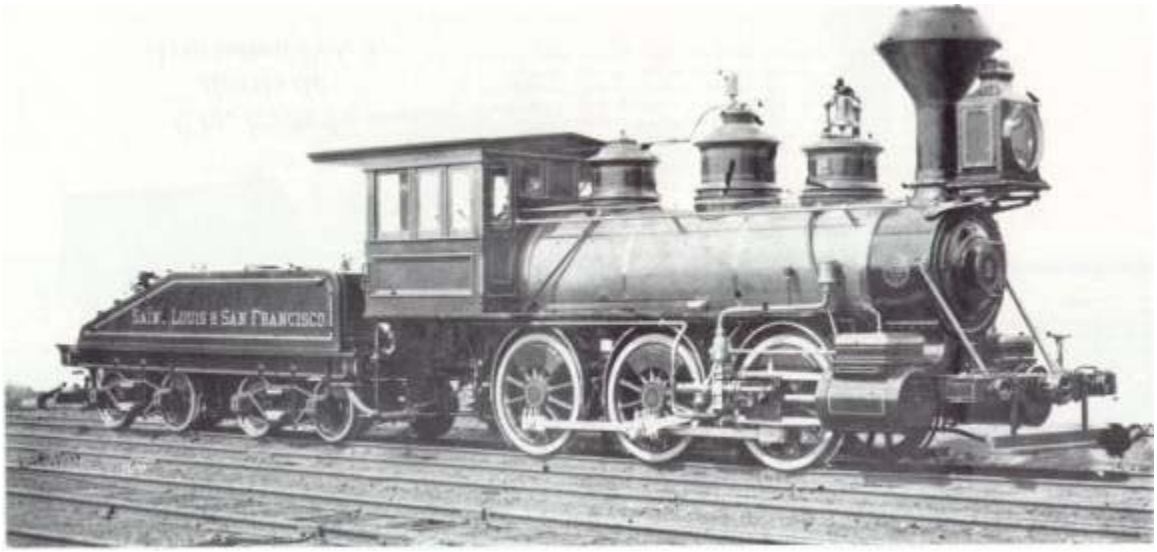

Another very small tender, low level to aid in rearward views, appropriate to this switching locomotive. Another style is demonstrated; the slopeback.

The classic 1870s iron tender on wood frame, demonstrated on the 1873 V&T 4-4-0 #18, 'Dayton'. This view demonstrates how the tender height is set by the cab rear windows. Note also how US tenders had flared rims to the top. The flare would remain a constant feature well into the 1900s. The origin is most likely due to the need for rim to hold the wood load in place. The angle of the flare also aided in the placement of wood cuts on end, using fuel wood as a temporary 'hungry board' to further enable filling the tender with more wood.

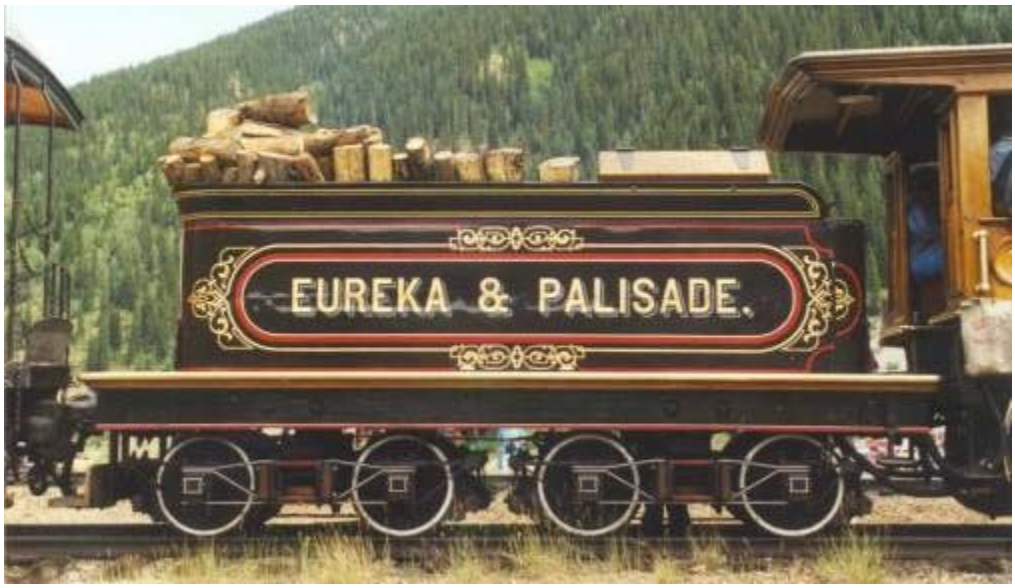

This view of the 1875 Eureka's tender demonstrates the use of the 'flare' to hold cuts of wood in the vertical position, providing a temporary 'hungry board' to enable more wood to be placed on the tender top. Note also the single horizontal line of rivets across the center line of the tender, where the internal bracing is placed. Beautiful artwork on the tenders of the 1870s was the norm.

The tenders of the 1880s and 1890s

The flared edges remain well after coal is introduced. The tenders become taller, holding more fuel. Note in this view of the 1887 C-17 #42 of the RGS, the Westinghouse air brake, main air tank on the top rear of the tender. Also note the rear headlight and rear access ladder.

The tender of an 1881 Baldwin D&RG C-19. Rear ladder and air tank are visible. Note the external air pipe run from the air tank back to the cab. The pipe is fixed to the tender sides via 3 bolted cleats.

One of the big tenders built for the last C-16s in service on the D&RGW. This tender replaced a rusting C-16 tender in the late 1940s. The tall sides provide more fuel space. Note the very large air tank on the top rear of the tender. Note also the cleats on the lower rear of the tender used to clamp the tender tank down to the tender flat car. Suspended along the lower sides of the tender are various re-railing devices. Far from any help, these devices are unhooked and used to re-rail a derailed locomotive.

The big tender of D&RGW C-16 #268. This was once the famous yellow bumble bee painted C-16. Note the re-railer suspended under the tender deck. Also the numerous brake system air pipes running along the chassis sides.

The famous 'Whale back' tenders of California and Nevada. These rounded topped tenders were the NG answer to the Vanderbilt Tender. Used only with oil burners, oil fuel was stored in the lead tank (1/3 the length of the tender) and water in the rear tank (2/3 the tender length). This is SP #9, at Laws California, once of the Slim Princess, the Carson & Colorado RR. You may not realize it, but the two tanks on this tender were completely separate tanks, lifted into place and bolted to the tender chassis frame as separate structures. There is literally daylight to be seen between the two tender tanks as shown in this next photo.

In this view you can clearly see the daylight between the two tanks. The joint line can be seen to the right of the word 'Pacific'. Stay tune for a how-to series by Kevin Miller on building one of these fine tenders for the Bachmann 4-6-0. Kevin's tender is an exact replica of the tender photographed here.

Later era tenders of smaller NG locomotives can be viewed on this 1920s Outside frame 2-8-0, exported to Mexico.

The flared tender edges are still evident. This loco has a large oil tank fitted in and extending onto the top deck of the tender. Note also the big air tank. There is a stop cock on the lower rear of the tender used to drain the tender of water. Note also the 4 bolted cleats along the lower rear of the tender, holding the tender shell down to the chassis frame.

This last photo is for Mr. Walas. A home grown tender is built for the Argent Lbr Co 2-6-0 #3. The loco was built by H. K. Porter. Much of the typical tender construction is evident in this photo; rounded corners, timber chassis decking etc. Note the added hungry railing to hold the wood load in place. Also note how the tender flare along the top edge is not angle outward.

Some Tender Details

Some minor details not easily seen in many of the above photos is as follows.

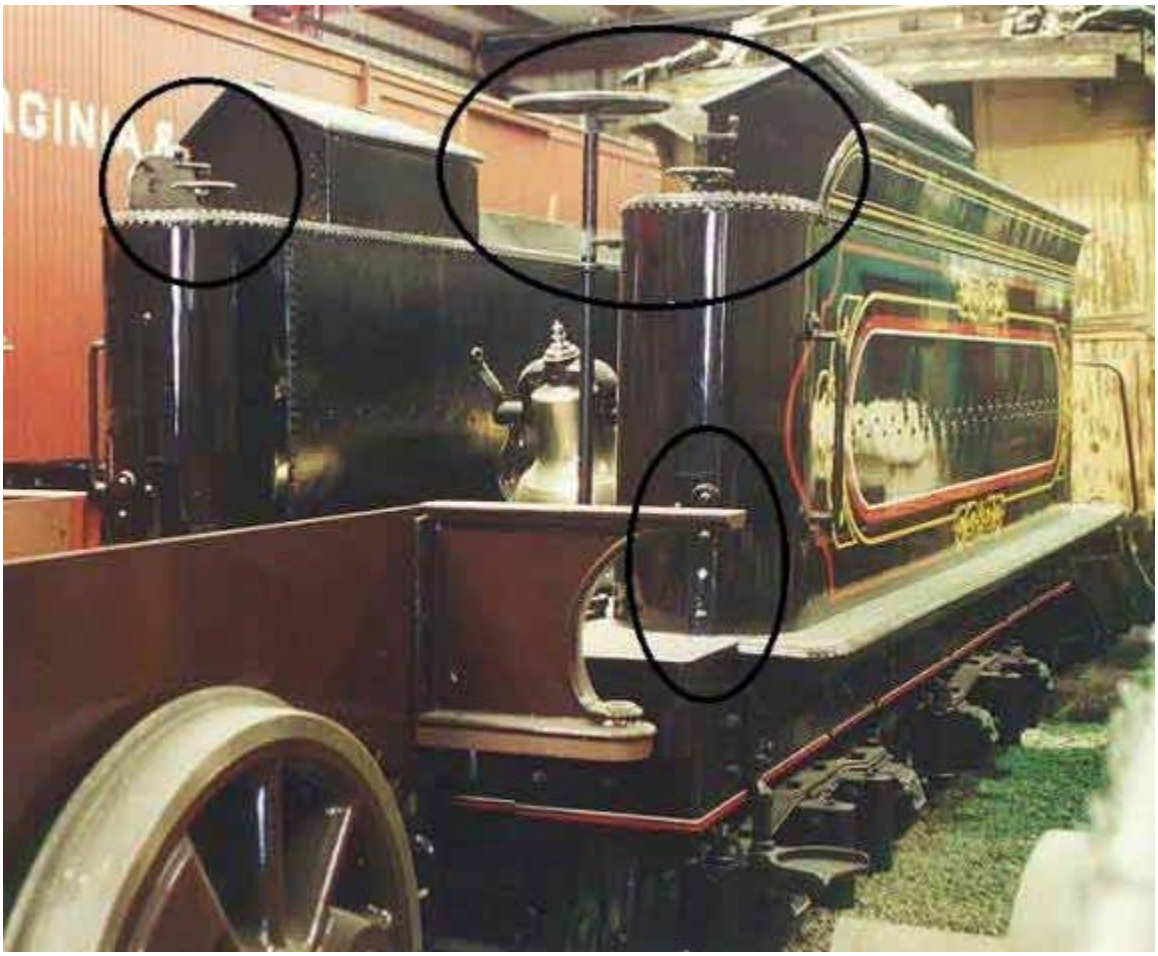

Note in the above photo the hand brake wheel to the right side. This brake wheel was, for a time, the only means to stop the locomotive using only the hand cranked tender brakes. Note also the curved front ends of the tender tank. At the base of the curved front ends are vertical bolted cleats used to bolt the tender shell down to the chassis. In all 4 cleats are used to bolt the tank shell to the chassis..two at the front end and two at the rear. Above the two rounded ends of the tender shell are two smaller hand wheels. These are the tender water shut-off valves. These valve wheels connect down to the bottom of the tender and are used to open and close the water valves to the tender water outlet pipes.

The above photo illustrates the feed water line from the bottom of the tender tank, connected to the locomotive's injector via a flexible hole.

Note the brass stop-cock on the side of the Inyo's tender. This is usually found somewhere on the lower side of a tender, used to drain the water.

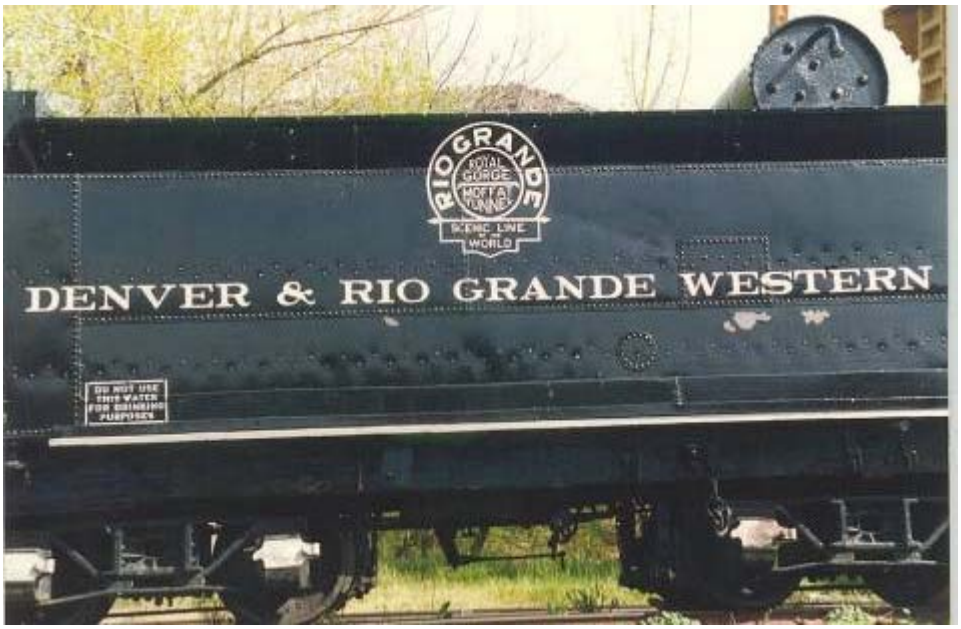

In an effort to keep rusting tenders in service, patches were applied to stop up water leaks. This old 1880s tender has seen quite a bit of repair. There is evidence of riveted patches as well as welded patches. This tender was once used with the D&RGW C-19 #346. Note also the large air tank atop the rear of the tender. I show this photo for a reason. When making your tender for the 2-6-0, don't design the tender to incorporate patches, even though they look pretty gog-danged cool. Rather build your styrene tender, and should there be any nasty finger prints, gaps or glue runs on the clean tender sides, then add your patches over the blemished model, hiding your bad workmanship and adding style to your tender at the same time.

With that we leap now into the last major work for the 2-6-0, building the tender.

The photo below I just couldn't resist! Looking through the 100s of photos used for this MasterClass series, I came across this lil rail car built for the Sierra Railway at Jamestown California. WOW!

Construction

The Tender -The Locomotive Semi-Final

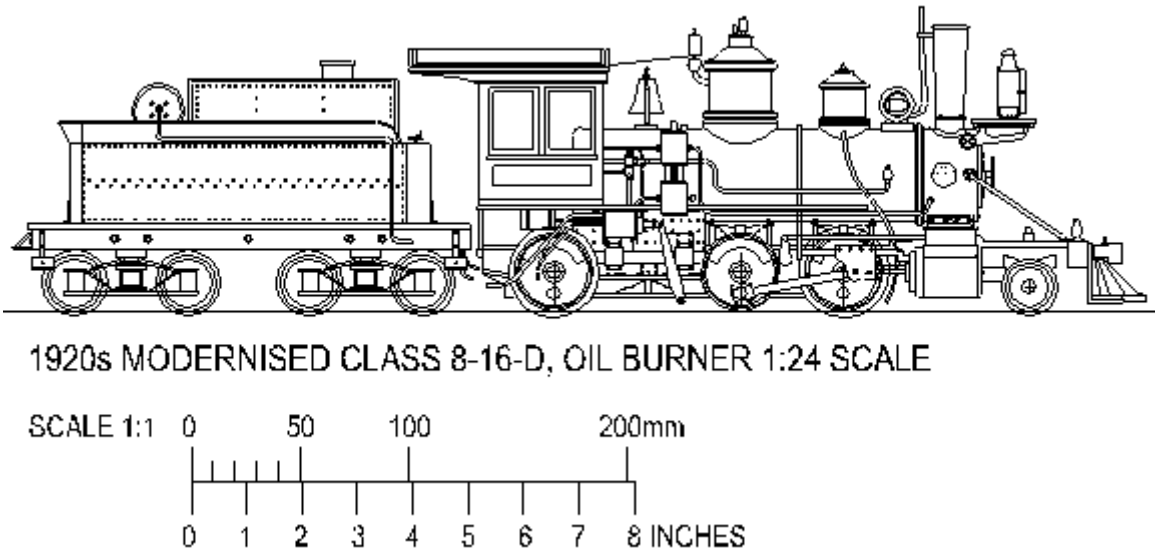

Lets get into it...Tenders Here We Come!

All tenders eras and scale types are basically the same as covered in this construction section. I'll note along the way where changes are required to make this tender appropriate for 1:20.3 scale. Basically all the tenders will be made to this style (Ignore the air tank-that come under 'Detail'):

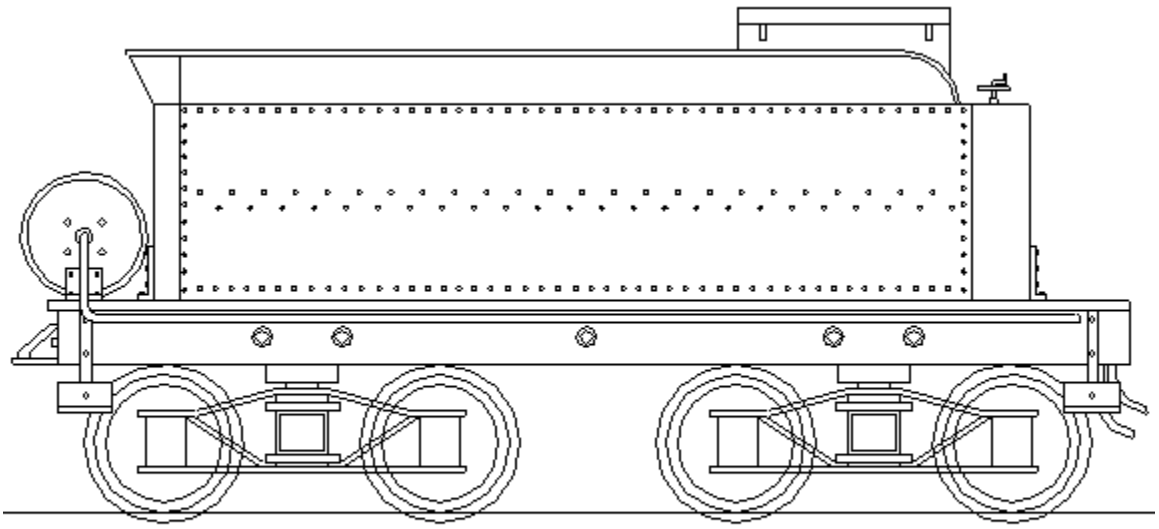

1870 -1880 COAL TENDER

You will need to have your tender trucks on hand. Hopefully you will have some secured during the chapter 1 parts finding pilgrimage. I used normal Bachmann arched bar trucks, fitted with

small diameter Bachmann metal wheels. The Aristo C-16 trucks with small metal wheels is also appropriate. You will need trucks with metal wheels, because you must be able to apply electrical wipers to these wheels for electrical connection to the loco. Some of the newer Bachmann trucks have 'wiper holes' cast into the frame, in which LGB plunger type wipers fit nicely. What I did was check through my collection of Bachmann freight cars, found one with the pic-up truck frames, and swapped them out with an older set. I now had a set of truck frames with provision for LGB wiper installation for the tender of the 2-6-0.

Building the tender chassis -flat car for the tender tank.

Step 1 - Making the tender deck

This easy..why would anyone want to buy a tender when you can do this! For 1:24 scale models, cut out a 204mm long x 88mm wide rectangle of 2mm styrene. This is the tender deck. For 20.3 scale, make this rectangle 204mm long (same length as 1:24) by 100mm.

Plank lines:
Using your knife, score some plank lines in across the top to simulate the wood planks, you can either add the planking detail to the full length of the deck, or simply score the visible areas, to the front and rear deck (about an inch inch of the deck only).

Tender chassis framing:
The tender framing is made up of 4 lengths of Plastruct 10mmx10mm square hollow section (SHS), two running 2mm back from the front and rear edges of the deck forming the draw beams of the tender. The other two SHS lengths form the bolsters for mounting the tender trucks.
Clad between the 4 SHS frames with a 10mm wide strips of 1mm styrene, this forms the visible side of the chassis running from front to rear.

As an option you can complete the under floor tender chassis framing by running lengths of 6mm 'T' section styrene from front to rear, 12mm either side of chassis center line.

The sub floor framing is as shown on this diagram:

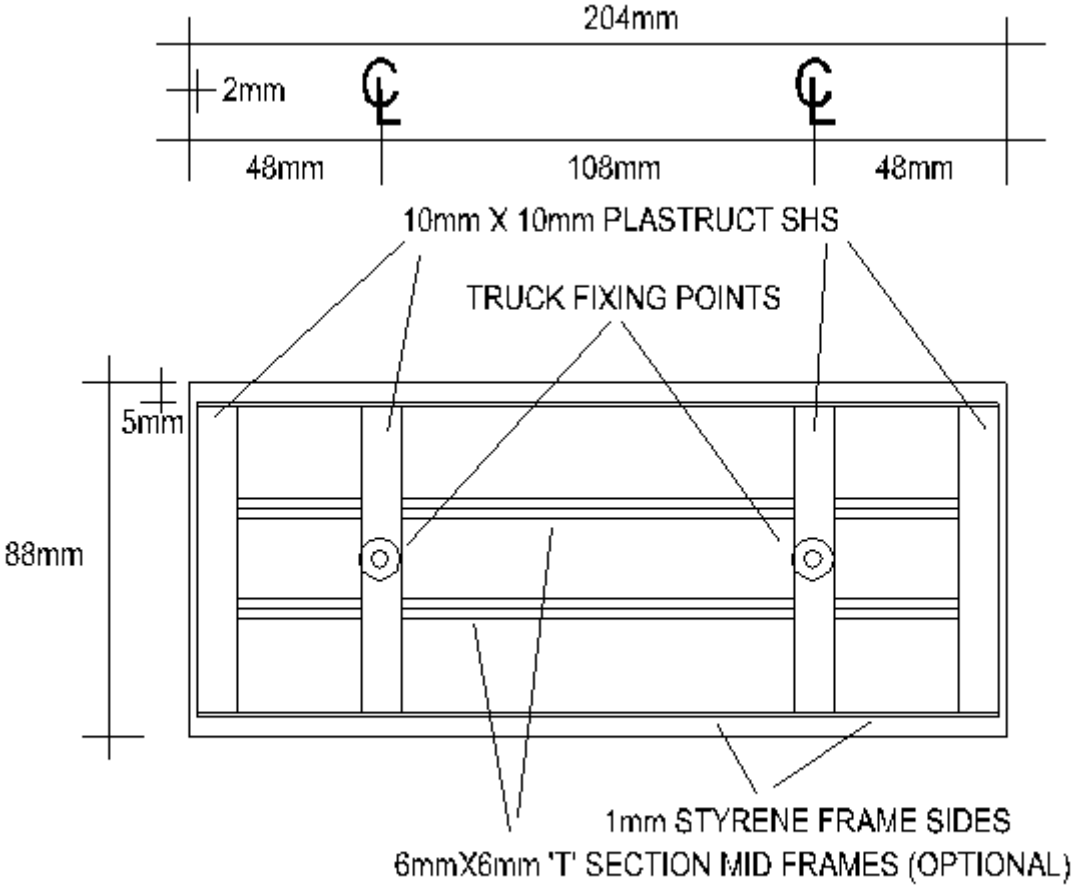

PLAN OF SUB FLOOR FRAMING

The tender chassis should look like this:

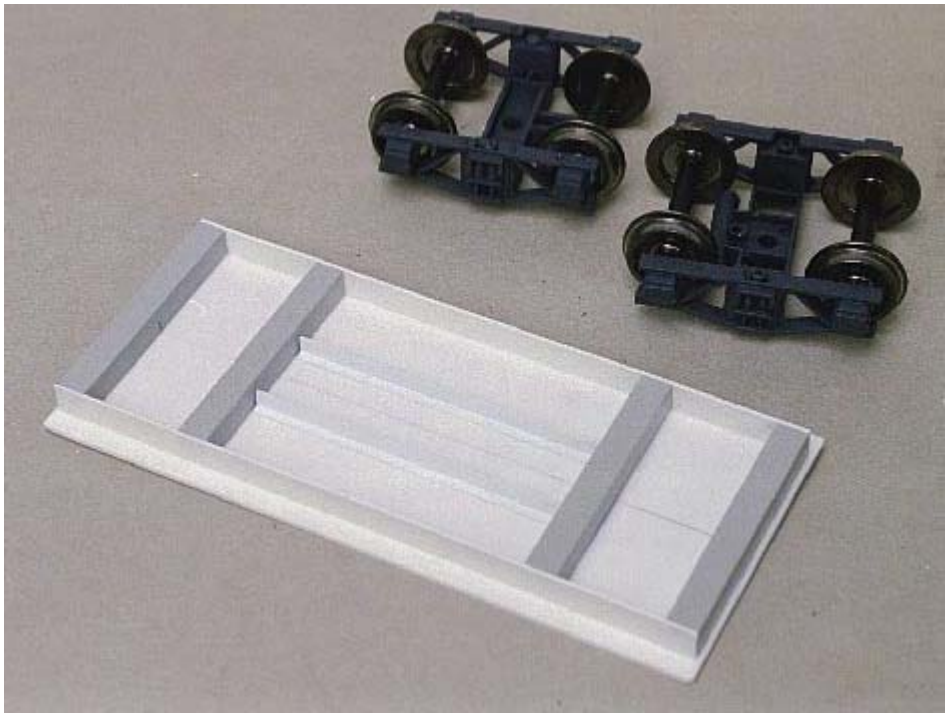

Note you may want to adjust the position of the truck bolsters to suit the exact size of your trucks. The setout shown suits Bachmann trucks, set out to look like the elevation at the beginning of this section.

Step 2 - Detailing the tender chassis sides

On the sides of the framing a number of bolt heads are required. These bolt heads are designed to hold the chassis framing together. On our models they are made as follows:

Bolts to the sides:
We have to add 10 bolts and washers to the side framing. These can be literally 4mm diameter metal washers with 2mm cubes of styrene applied centrally to each washer. Apply to chassis sides with CA glue. Or you can make your own washers from 0.5mm styrene sheet, and weld them onto the chassis side.

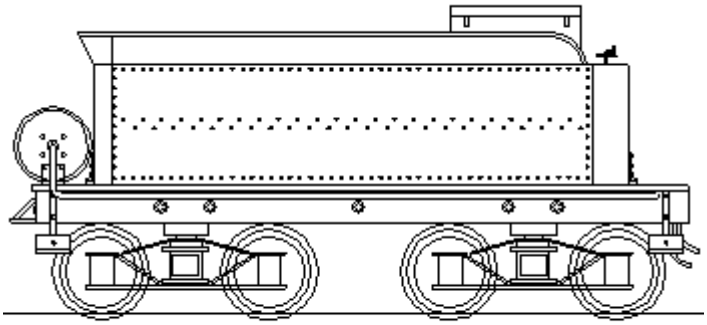

1870 -1880 COAL TENDER

The bolts heads and washers are set out as shown in the above diagram. Two bolts above each bolster end, and one at the tender mid point.
In place the bolts should look like this:

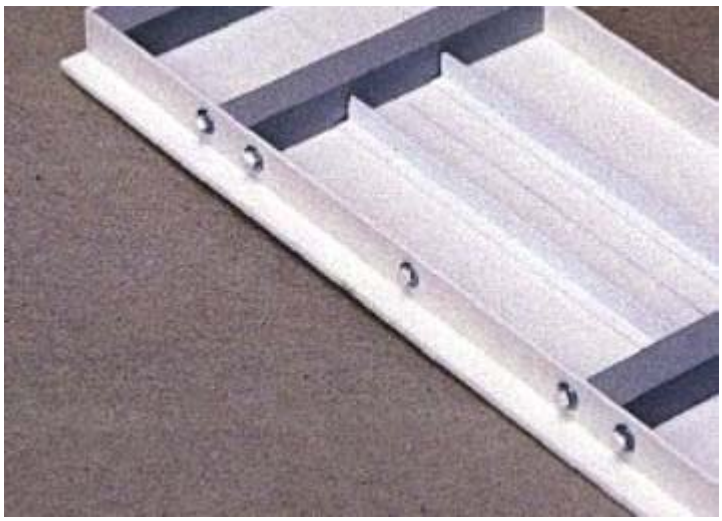

In the above layout, I used 4mm metal washers with 2mmx2mmx2mm styrene cubes on top.

Detail to the end beams:
On the end frames there are cleats and bolts to be made, as well as coupler pocket areas.
To each of the 4 end corners of the chassis, apply a 10mmX14mm 0.5mm styrene patch.
Weld onto the top of each of these patches 5 tiny bolt heads, using your trusty styrene rivet rod (Evergreen .020x.030" strips).

The lead end
On the lead end of the chassis, the end that will be next to the loco, apply two patches of 1mm styrene forming a 'buffer' patch in the centre of the beam. The lower layer can be a 10mmX14mm patch, with the 2nd patch atop being 8mmX10mm.

The lead end of the chassis beam will look like this:

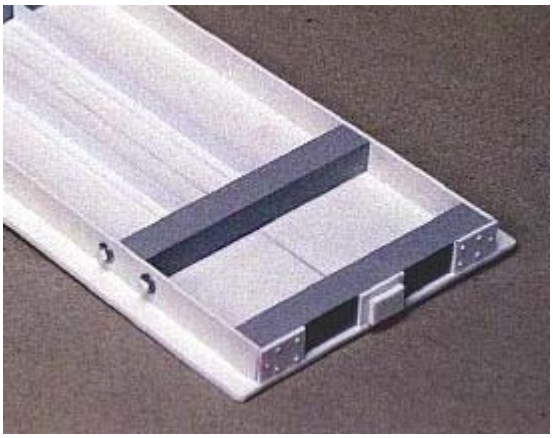

The Rear end
On the rear end of the chassis we simulate the couple pocket structure. If you're using KD couples or any other kind of body mounted coupler, you will not need this couple pocket detail. If your coupler will be mounted to the trucks per normal practice in LS, then this couple pocket detail helps to integrate the coupler on the truck to the tender.
The coupler pocket is made from a 10mmX 18mm base of 1mm styrene. Mounted at right angles along the bottom of this patch is a 2nd rectangle of styrene, 10mmX15mm, with the corners cut off on the outer edge. 4 triangular bits of styrene are added into the right angle, and two styrene bolt heads to the top simulating the fixing of the coupler pocket to the chassis frame. It sounds complex, but in all the whole rear end of the chassis will look like this now:

Note the cleats and rivets to the ends of the beam and the coupler pocket to the middle. The Bachmann/Delton style knuckle coupler will float right below this pocket.

At this point it is worth trying out your tender trucks. You may need some squares of 2mm styrene mounted to the bolster centers, to raise the trucks to the right level. Try to install the trucks so that the flanges are just level with the bottom edge of the tender framing. Again refer to the tender elevation at the beginning of this section. To install the trucks, measure out the exact center of both bolsters, drill a hole into the bolsters, right up into the deck. Just screw the trucks on! Do not over tighten the screws, allow for some slop in the trucks to ride over rough rails.

Once you're happy that the trucks fit, remove them and store them away till the end of the chapter.

Step 3 - Building the tender tank

This is the bit that gets everyone asking...HOW THE HELL DID YOU DO THAT??!!

The curved corners to the tender tank, presents a problem because most of us think its easier to make a right angled corner. Curved corners evoke images of bending styrene, heating plastic to get it to bend etc...not necessary. We made the corners out of lengths of pipe, and because only one part of the pipe is visible externally, we don't need to even cut the pipes into corner fitting units!

The tender tank is made in this way:

> Cut two 12mm dia styrene pipes (Evergreen 12mm Dia) to the full length of the tender side (37mm). Cut out two lengths of 22mm diameter pipe (PVC Electrical conduit).

Tender side panels - Outer Cladding

> Cut out the 3 rectangular sides of the tender tank to the desired height and length from 0.5mm styrene sheet:
> For 1:24 scale models, the long sides are 145mm long X 37mm tall. The rear end is 74mm long by 37mm tall.

For 1:20.3 models, the sizes will be taller, and wider. In general the tender height will match the cab window sill, but taller is OK if you wish.

Now we punch in the rivets. On the rear face of the 3 styrene panels, draw a pencil line around the perimeter, 2mm in from the edge. Draw a horizontal pencil line across the middle of each panel. Then draw two more pencil lines, 1mm to each side of the center line. These pencil lines are our rivet set out. The 3 pencil lines across the middle of the panels lay out the zig-zag line of rivets.

Place the styrene sheets flat onto a hardwood board, something hard and flat you can punch into. Using a metal spike press rivets into the styrene by applying some pressure on the spike into the styrene. Press a line of rivets along the edge pencil lines. If you turn the styrene panel over, you will see nice domed heads bulging out of the styrene. Do not apply too much pressure on the spike or the rivets will be too big, or worse, you'll punch right though the styrene!

Down the center lines, apply a zig-zag line of rivets to the pencil lines 1mm either side of the center line...do not apply any rivets to the center line itself.

Only press the rivets into the styrene on a hard firm surface, while the rivets will punch easier into a softer base, you will distort the styrene, and curl it up. You want the panels to remain as flat as possible. The rivet pattern is as shown on this typical tender elevation:

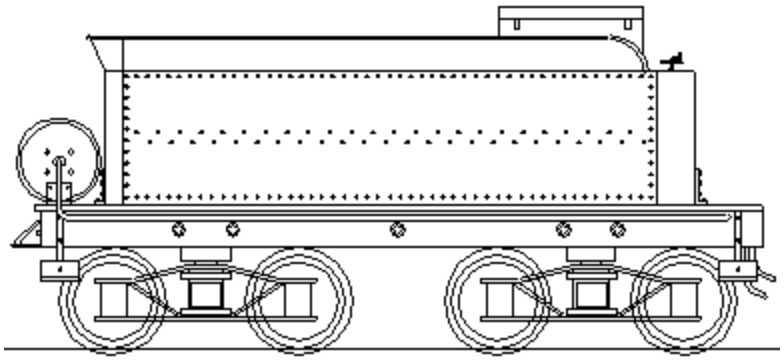

1870 -1880 COAL TENDER

The styrene panels will start to look like this:

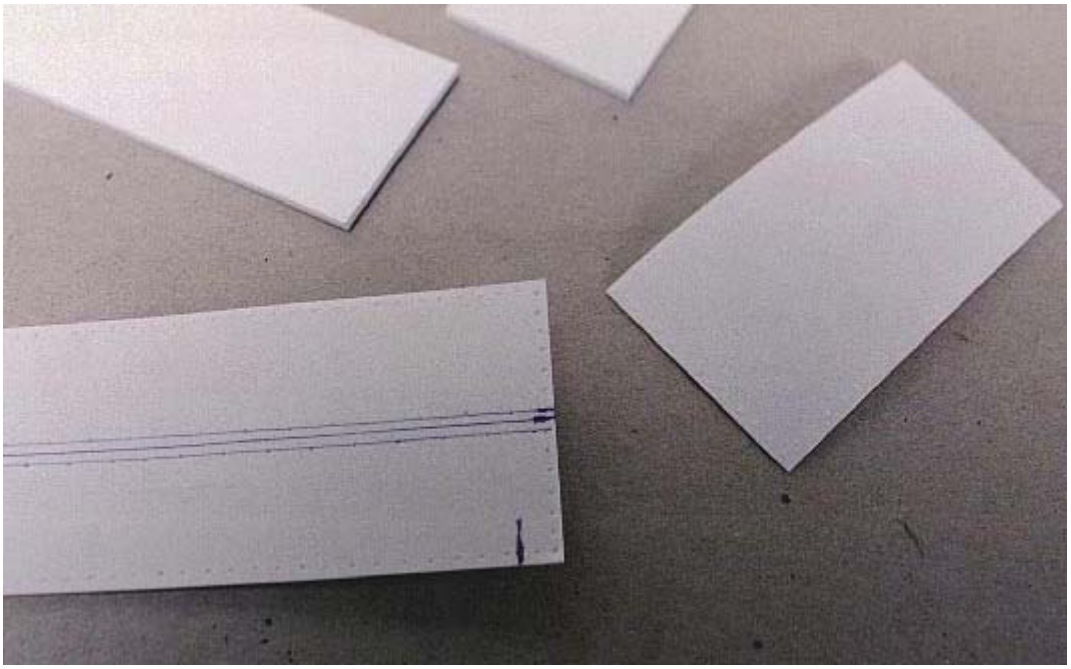

Tender Side Panels- Inner Structure

Cut out some inner structural panels from 2mm styrene, sized to match the dimensions of the outer cladding. Now trim back the two long side panels by exactly 12mm. Trim back the end panels by 10mm.

Fitting the tender parts together

Its best now to simply show how the various panel layers and pipes come together in a basic plan of the tender.

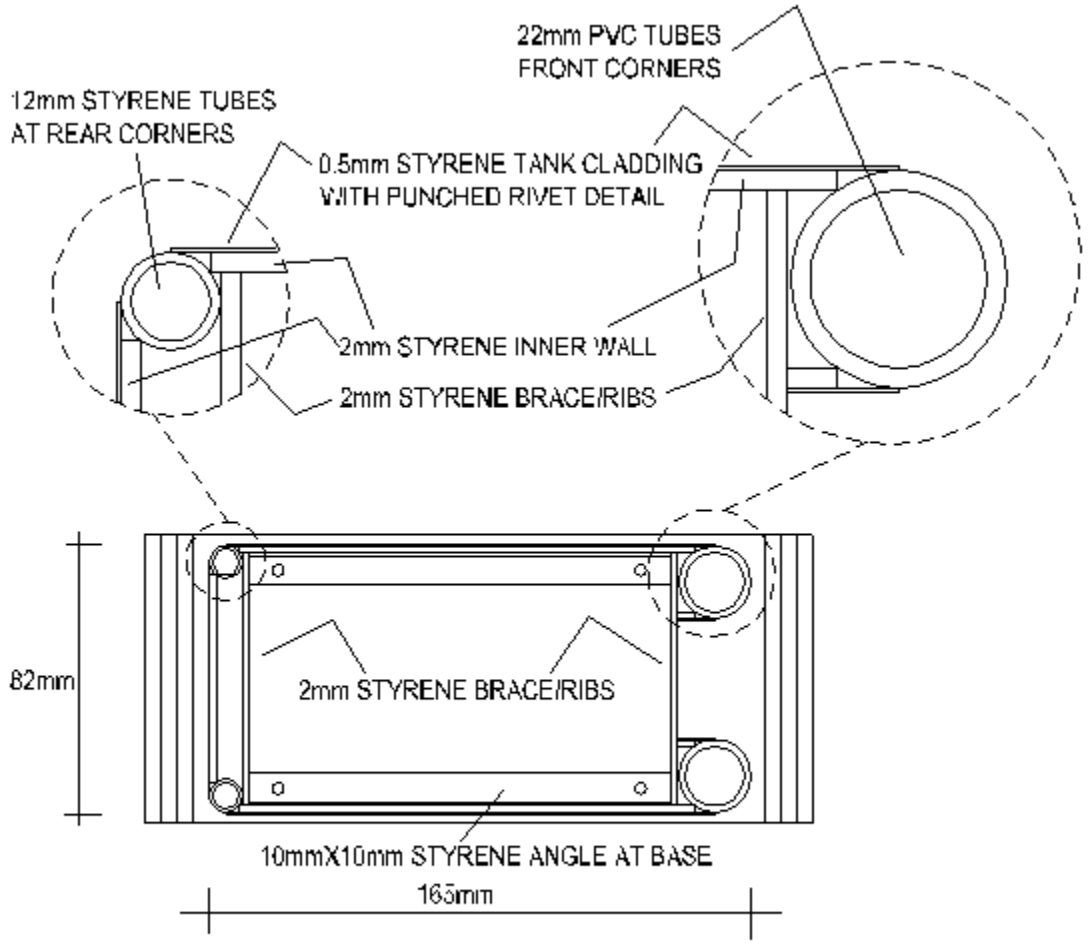

PLAN OF TENDER SHELL CONSTRCUTION
WITH NO EXPOSED FUEL BIN

Basically the 2mm styrene panels are clad over with the rivet punched 0.5mm outer cladding. The outer cladding is longer than the inner cladding, such that the outer cladding reaches the center/tangent line of each of the corner pipes. The inner structure stops short, butting into the sides of the pipes.

Where the side panels meet the 12mm dia corner pipes, the inner panels stop 5mm shy of the end of the outer cladding.

Where the side panels meet the 22mm dia corner pipes, the inner panels stop 7mm shy of the end of the outer cladding...now you know why the long panels are 12mm shorter than their cladding (7mm+5mm = 12mm) And the end panel is 10mm shorter than its cladding (5mm+5mm=10mm).

Before you start assembling you tender tank, the first thing to do is to laminate the 0.5mm outer cladding to the 2mm inner panels. DO NOT WELD THE OUTER SHEETS TO THE INNER PANELS! Welding these sheets can result in buckling of the styrene, producing ripple lines in the cladding.

Also when the tender is left out in the sun, the layers of the styrene can de-laminate, causing air bubble affects on the tender sides. You want the tender sides smooth and flat.

The most successful way I've laminated styrene sheets together is to grease an even layer of 5min araldite across the 2mm styrene backing panel, and press the outer cladding firmly onto the backing. Make sure the araldite is a smooth layer and covers the entire 2mm surface. Be sure to watch that the outer cladding is over hanging the ends of the packing by 5mm and 7mm where required. Make sure the cladding doesn't slide crooked. The top and bottom edges will be perfectly aligned. Use a heavy flat object, such as a book to hold the layers flat together.

When the panels are dry, use a sparing amount of welder to weld the very ends of the 0.5mm styrene flat against the pipe sides. Apply the pipes to the long walls only. Use 5min araldite, applied from the inside to hold the 2mm styrene inner panels against the pipes. When the two sides are done, apply the rear panel to the 12mm pipes as required.

Option for bracing.
We brace the tender sides together with two vertical 2mm ribs to be run inside the tender tank. Depending of how much space you want inside the tender (for sound or battery), the position of the bracing is critical.

If you want to have a fully and properly formed fuel bin, then you need to form the bin sides in the same way we made the tender sides. The bracing will run along the rear of the fuel bin...no space for anything in the tender shell, but from the outside, the whole tender is formed properly. In this scenario the plan of elements in the tender is like this:

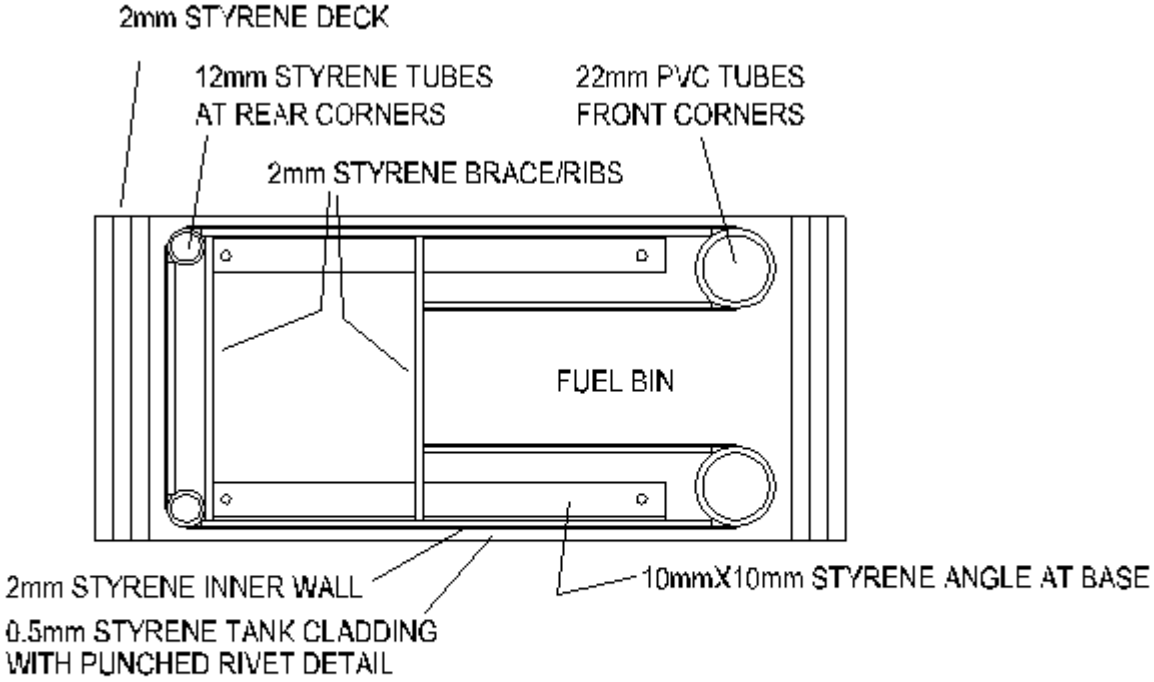

PLAN OF TENDER SHELL CONSTRCUTION
INCLUDING EXPOSED FUEL BIN

If your tender will be fully loaded with coal or wood etc, such that you cannot even see the fuel bin, because its all hidden under the fuel load, then the bracing will be setout as per the diagram above under 'Fitting the tender parts together'. Note in that diagram there is no fuel bin, but the entire inside of the tender is hollow.

Note in both versions there are lengths of 10mmx10mm angle running along the bottom sides of the tank, welded to the inside face of the tender sides. These angles will be used to screw the tender tank town to the chassis very soon.

Your tender should now look something like this:

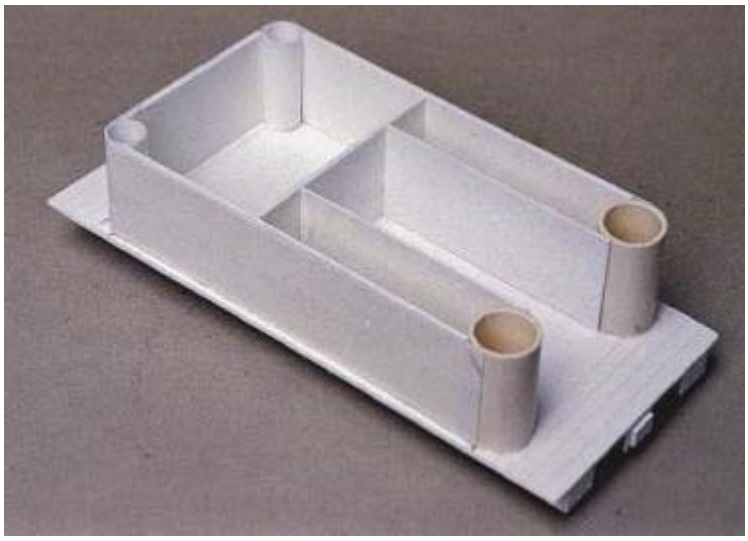

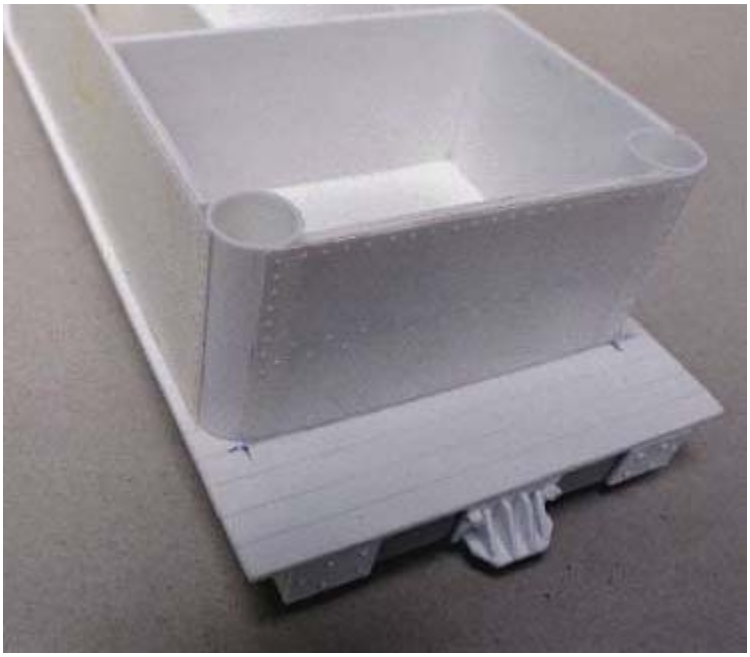

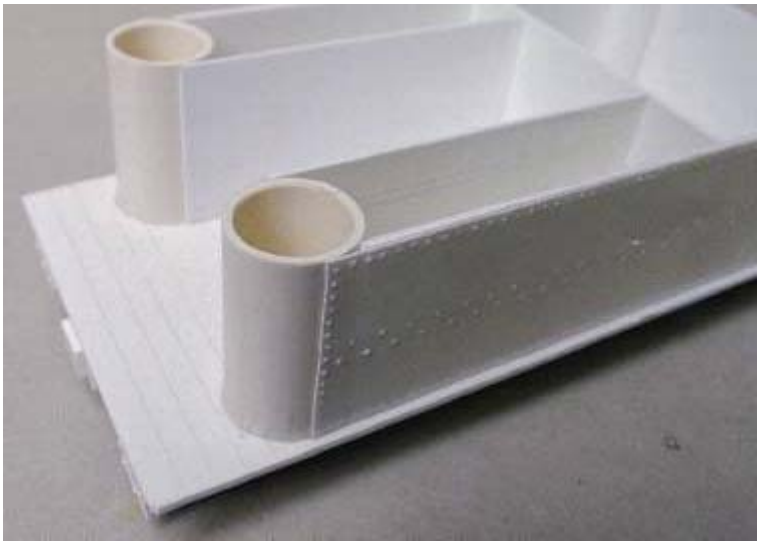

Step 4 - Making the tender top

This is the easy bit. We make a tender top out of 1mm styrene sheet. It has to be made to fit the curved and straight sides of the tender exactly. All I do is grab a sheet of paper, place the paper flat on top of the tender shell. Holding the paper firm on top, rub your fingers around the top edges of the tender, the profile will be rubbed onto the paper sheet. Your tender and sheet of paper will look like this:

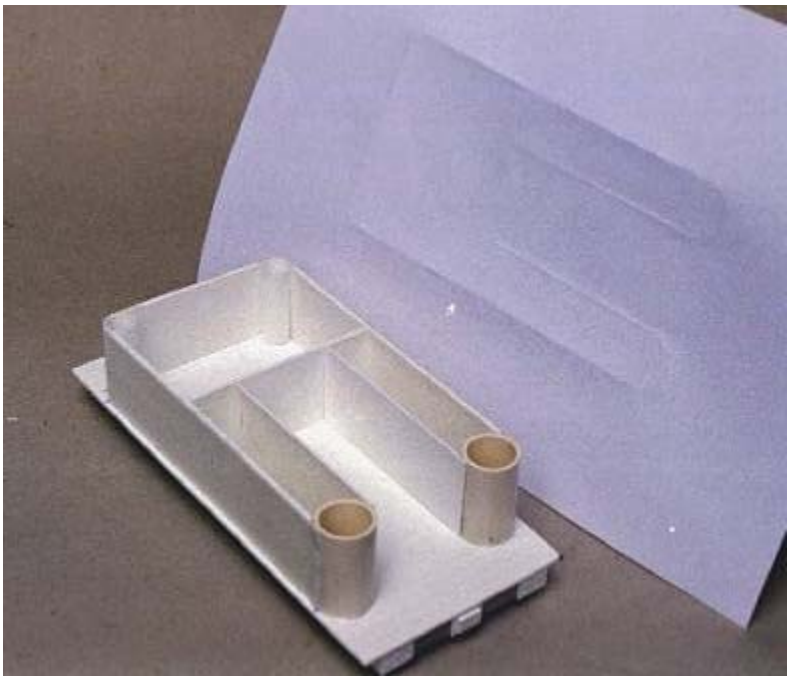

Cut out the paper profile, and place it on top of the tender, check for accuracy of fit. Trim here n' there if necessary. The paper top is your template to make the tender top out of 1mm styrene sheet. Trace the template and cut out the tender top in styrene.

OK now IMPORTANT TIP!
You will be installing the tender flare very soon....this is the angled trim running around the tender top. So me must provide a slot in the tender top for this to be inserted. We will not be just

placing the flare on top of the tender top sheet. We do not want to see the edge of the tender top from the outside.

Once you've created the exact profile for the tender top in 1mm styrene, trim back around the outer edge of the top, a full 1mm to the extent where the tender flare will run. Only the lead end pipes area will not be timed...refer the detail shown here, the double lined area is the 1mm trim to be removed. This will provide the seat for the tender flare.

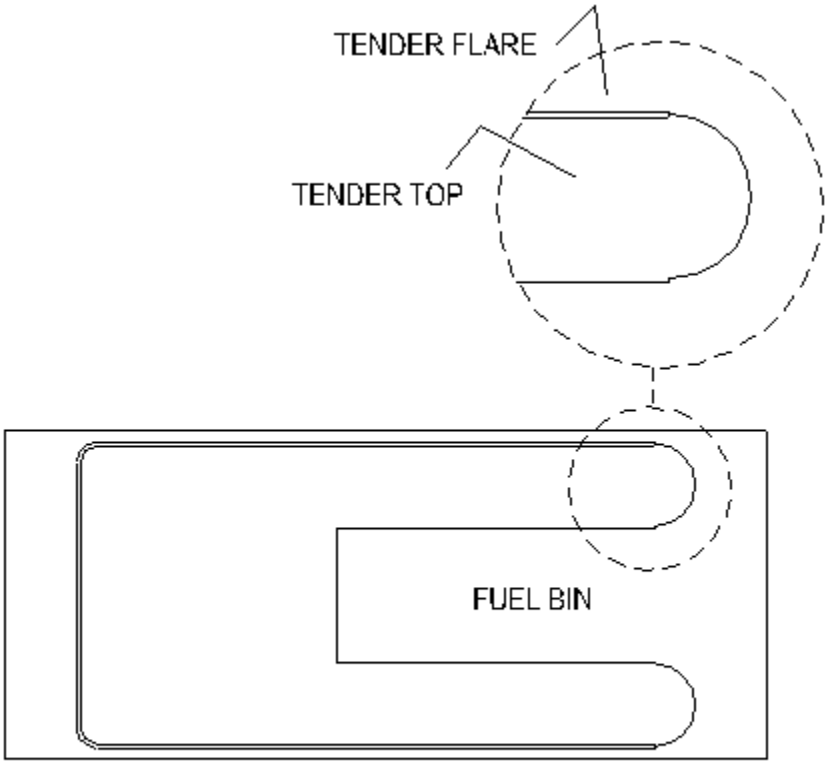

PLAN OF TENDER TOP SHEET
INCLUDING EXPOSED FUEL BIN

Using welder apply some 10mmx10mm plastruct angles to the upper inside face of the tender sides. This will provide a shelf for the tender top to rest on. Weld the tender top down to the angles, be careful not to slop welder down the joints around the corner pipes, you will risk distort the thin tender cladding.

Step 5 - Making the tender Flare

We make the tender flare out of 3 strips of 10mm wide, 1mm think styrene. Cut the lengths of the 3 strips to match the lengths of the tender tank cladding, ie two lengths at 145mm long, and one at 74mm long. Weld these flare strips to the tops of the tender sides, take care not to slop welder down over the walls, or into the pipe jointed areas, or you will distort the tender tank cladding. The flare strips will run up to the curve, but not around the rear tender curve.

The section view though the tender, showing tender tank screwed to chassis, angles internally supporting tender top and installation of flare is shown in the following diagram:

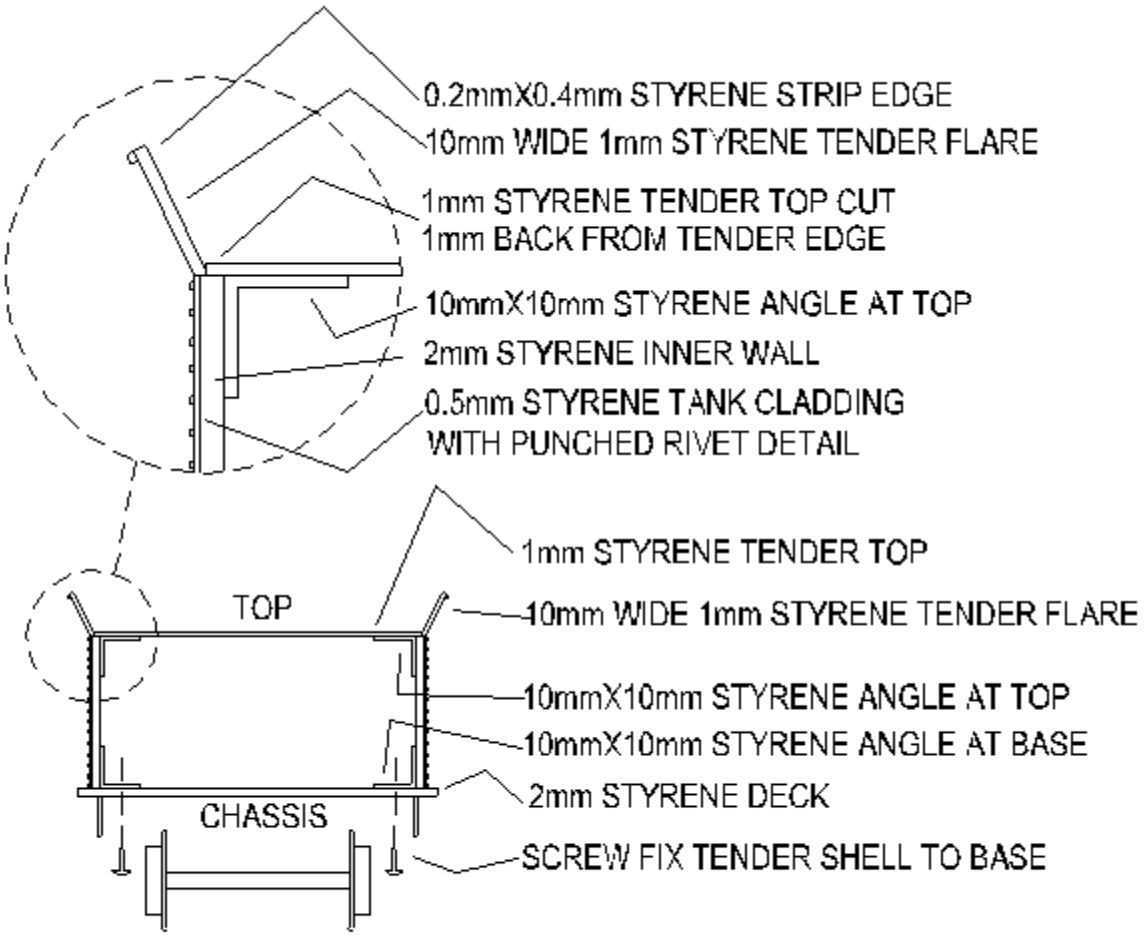

SECTION THROUGH TENDER

Making the Corners to the Tender Flare.
This is probably the hardest part of the tender to make - filling in the curved corners to the flare. The corners are not only curved, but splay outward also.

Make sure your straight sections of the flare are secured in place...thus you have a whole tender top without the curved corners....THEN...you cut out a scrap of paper, about 1"x1" sq. Press the paper onto the side of the tender from the outside, wrapping it around the curved flare area...hold it tight. Get a thin pencil (clutch pencil type) and from the inside of the flare trace the curved gap in the flare onto the inside of the paper. Take paper away then flatten it out and cut out your tracing. You will have a 'banana' shaped profile. Trace that 'template' onto 1mm styrene. Take this styrene part and heat it over the cooker, don't melt it, warm it up and bend it into the curve you need. It's a 1 dimension bend, no compound curves required.

Take it back to your model and insert into the flared corner, trim a little and weld into place. You integrate the whole flared sides and corners using the thin styrene trimmer around the tender top. The trimmer is the same styrene strip we've been using for rivets (Evergreen 0.20x0.30" strip). Weld it to the upper side of the flare, wrapping around the curved corners all in one length of strip.

At this point your tender should look like this:

Step 6 - Brake wheel, Hold Down Cleats & Water Shut-off Valves

Some detail to add to the tender is as follows:

The Brake wheel

Next to the fireman's side of the tender, install a brake wheel on a 1.5mm brass rod. The rod should be about 45mm tall, bringing the brake wheel above the tender top. I used a surplus Delton freight car brake wheel. Ozark and Trackside details also make pretty good brake wheels. You're after a wheel about 16mm in diameter. The wheel installed looks like this:

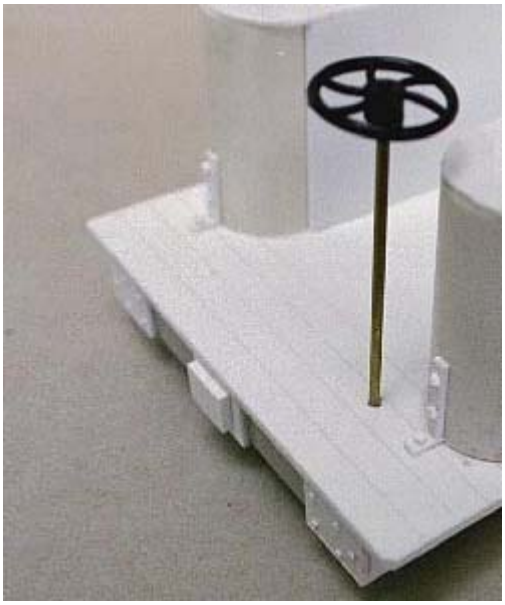

The Hold Down Cleats

Four cleats are to be made that represent the cleats used to bolt the tender shell down to the tender chassis. Two cleats are installed at the front of the tender shell, two at the rear.

Each cleat is made from 1mm styrene sheet. Make an angle up from a 12mm tall, by 2mm wide vertical strip and a 4mm x 2mm horizontal strip. Weld 3 bolt head onto the angles, made from 1mmx1mmx1mm cubes of styrene. The angles with bolts welded on, are installed as shown here:

Cleats to the rear end:

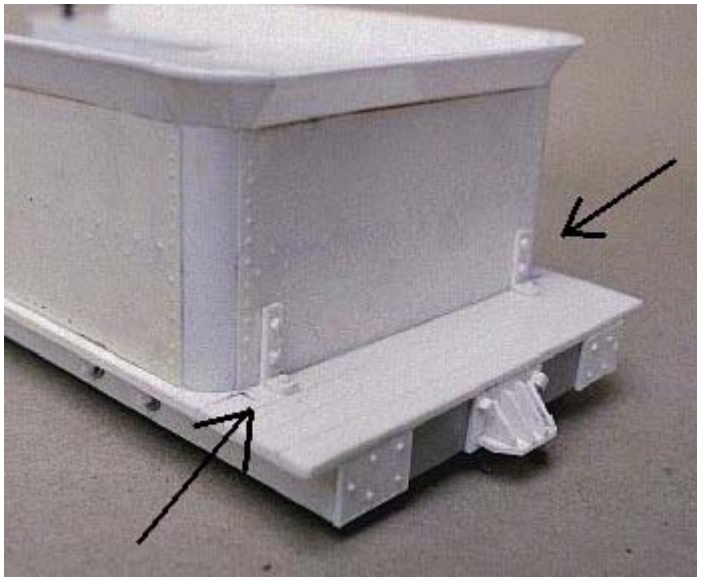

Cleats to the front:

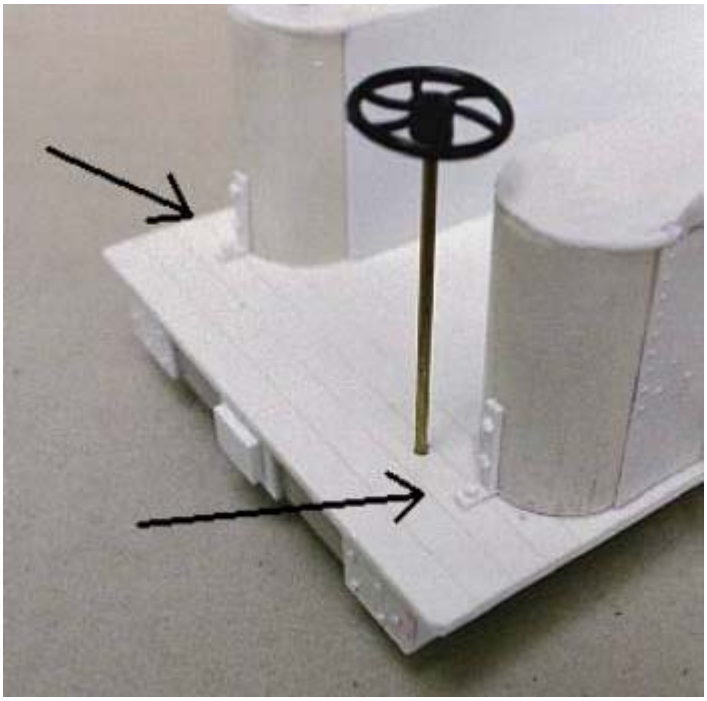

The Water Shut-Off Valves

If you have some old disused Bachmann tenders or fittings such as used on the Bachmann 2-4-2, or 4-6-0, or Even the Delton C-16 tender, you can use the Shut-off valve parts from those tenders. You can also buy castings of such devices from Ozark or Precision scale. If that is too much trouble, then you can make the valves in the same way you made valves in chapter 6. Use 4mm press-studs for the hand wheels, and plastruct 0.75mm plastic coated wire for the stem.

Basically you're making a V1 type valve. Drill a 0.75 hole in the top of the tender shell in the center of the 22mm PVC pipes. Insert a 15mm plastruct wire into the whole, leaving approx 10mm sticking out. Trim off the top 8mm of styrene sheathing on the wire. Insert the press-stud wheel onto the wire and secure with CA glue, with approx 6mm wire exposed above the wheel. Then using long nose pliers, bend the exposed wire into a crank handle.....bend the wire horizontal for about 4mm then vertical for the last 2mm. That's it, a water valve! Make two of these. The water valve will look like this:

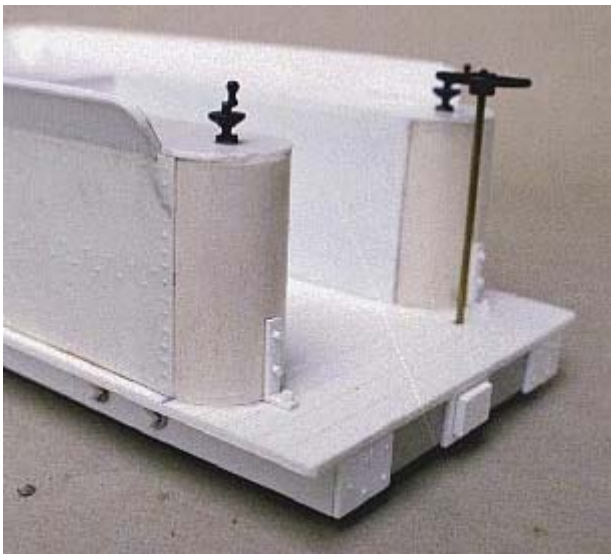

That's the basic tender shell built, your tender will look like this:

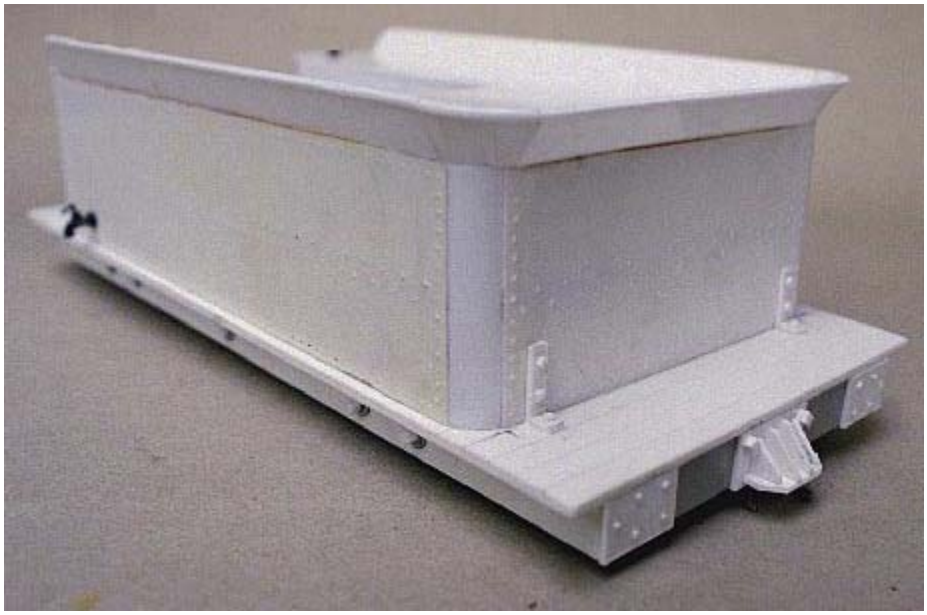

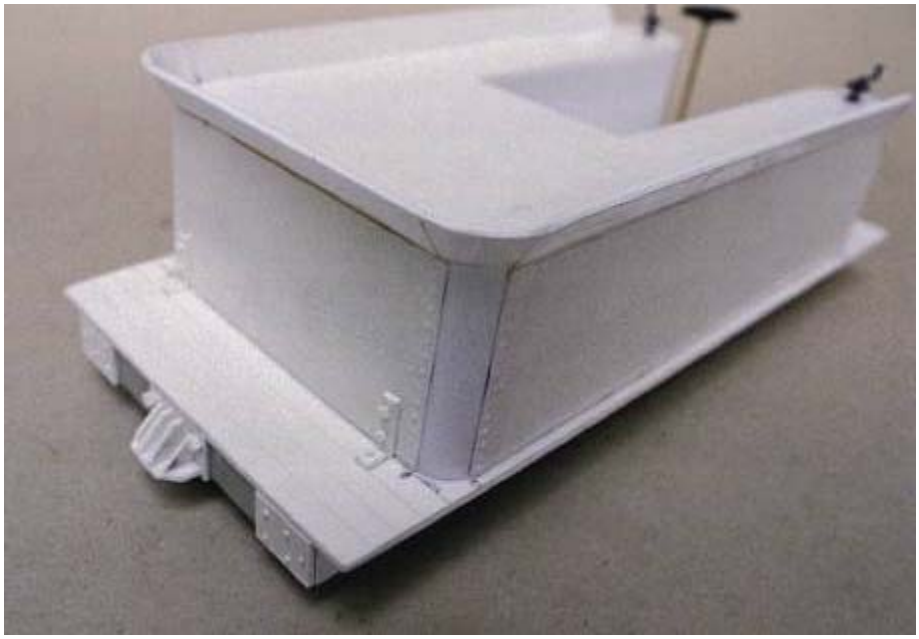

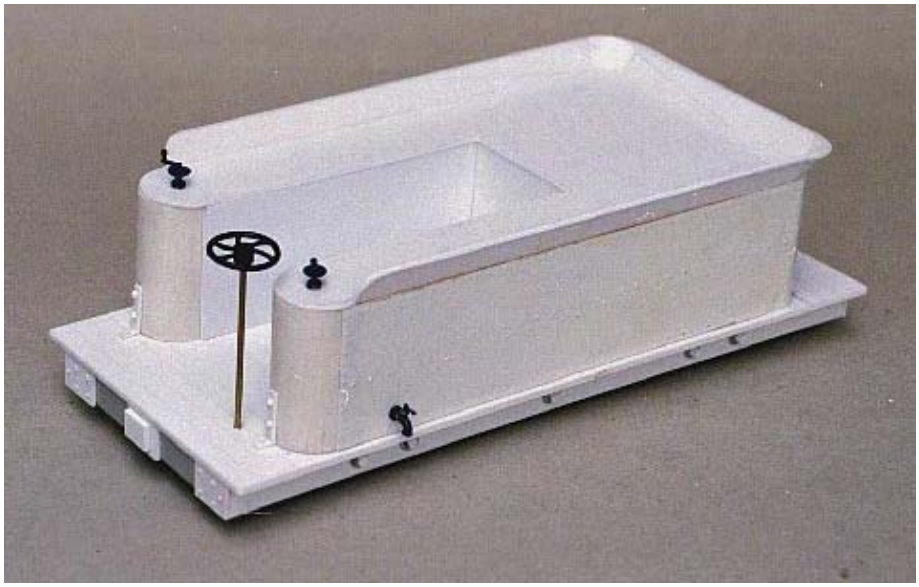

Fitting the Tender Drain Cock

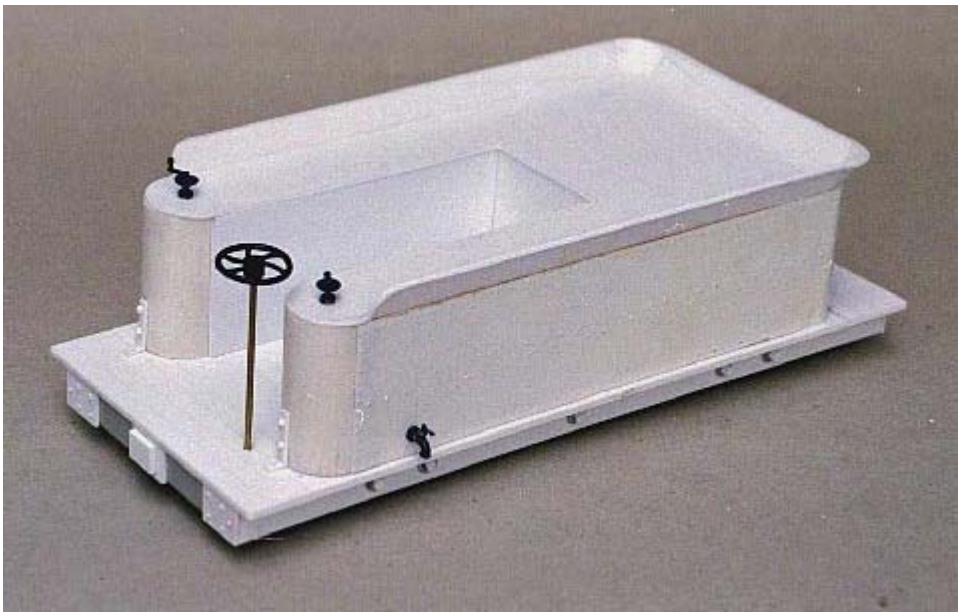

You can see in the above image a tap mounted to the fireman's side of the tender, down near the base of the tank. This is the tap used to empty the water tank. It can be located as shown above. Sometimes, its mounted to the rear tender wall (refer the Mexican 2-8-0 tender in 'Background'). Sometimes it's mounted under the tender deck out of sight.

On the model shown, I used an old Bachmann tap and just inserted it. A home made approach is to use a press-stud wheel and make a type V2 valve (as shown in chapter 6). Make the tap out of 3mm styrene tube, insert the V2 valve atop, and make the tap end by inserting an 'L' shaped bit of 1.5mm brass rod into the end of the 3mm tube, face the end of the 'L' downward...a tap!

The home made drain cock and water shut-off valves can be made as shown in the following diagram:

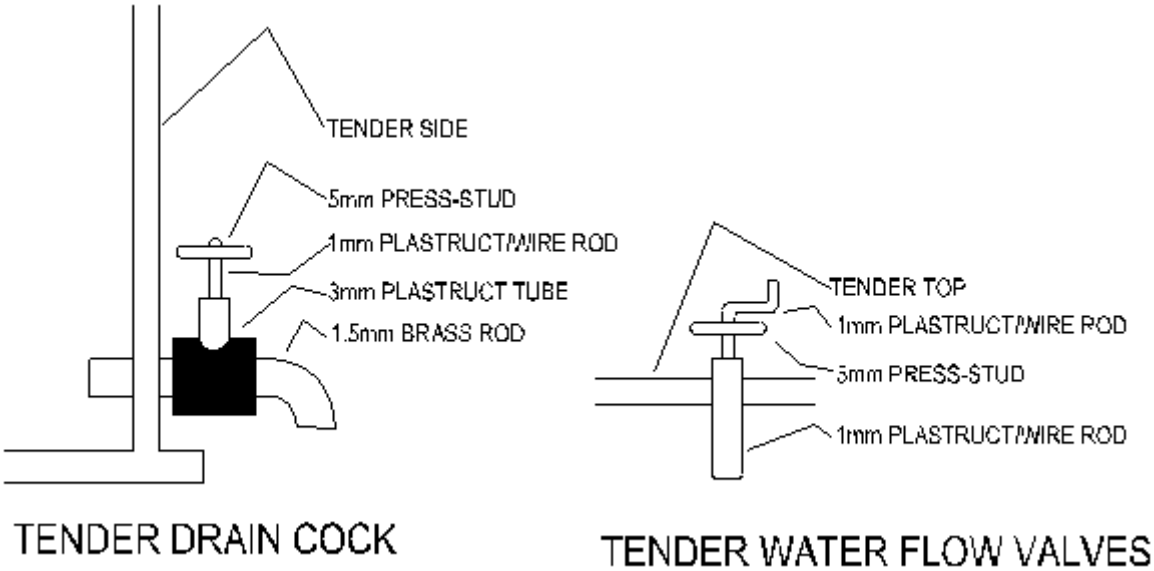

Now proceed to the 'Detail' section to apply the fittings to your tender, depending on era, fuel used etc. We'll also fit the hand rails etc.

Detail

On the Home Stretch

We'll first cover some detail appropriate too all era tenders, then proceed to detail either a coal, wood or oil tender.

Tender Handrails

We make the tender handrails from 0.75mm brass rod. Typically bend the wire into a 'U' shape, drill small holes into the tender sides and insert the wire, secure with CA glue. On the typical tender of this 2-6-0 size, there are only 4 vertical handrails required. One mounted to the sides of the tender, near the corners. These images indicate the front and rear handrail location.

Tender Steps

Four tender steps are required, which provide access to the tender end decks. There are several ways this can be done. The easiest is to make 'U' shaped stirrup steps out of 1.5mm brass rod and insert them vertically into the bottom of the tender deck.

For this 2-6-0 tender however, I made single leg steps with a platform on the bottom. Each step was made from a 16mm length of 3mm wide, 2mm thick styrene. On the end I formed an angle of 1mm styrene - the base (tread) was12mm x 6mm, and the vertical rear section was 12mm x 3mm. Insert the vertical leg of the step to the sides of the tender framing and weld two rivet heads onto the vertical. The finished step are laid out on the tender framing as shown in this typical elevation:

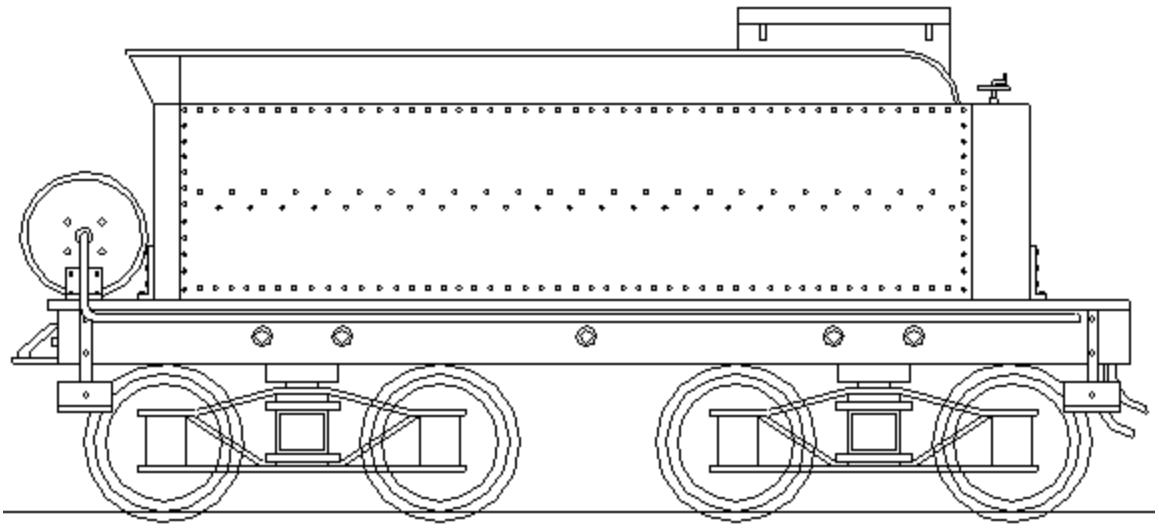

1870 -1880 COAL TENDER

The finished steps on the model will look like this:

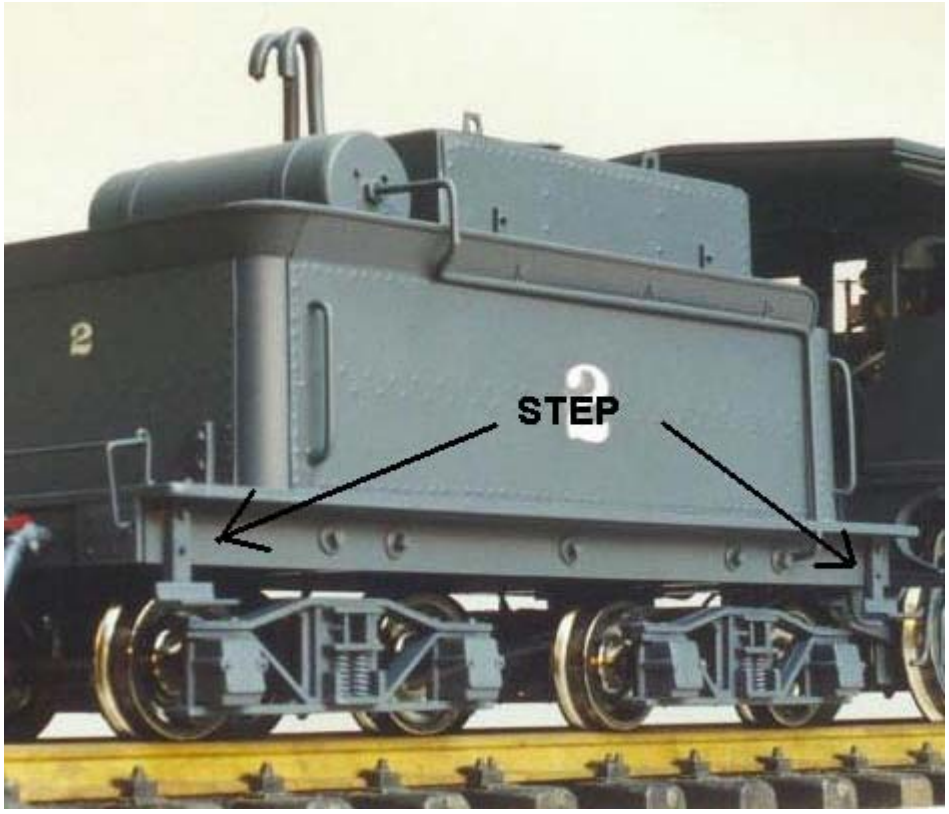

The Water Hatch

The water hatch is made from a 6mm tall length of 12mm diameter styrene Tube. Weld a 0.5mm styrene lid on the tube, with the edges cut about 1mm wider than the tube. Weld two strips of 2mm wide 0.5mm styrene sheet to the top to form the hinges, and weld on some rivet cubes to

simulate the bolts on the hinges. Weld the hatch to the rear tender tank roof, with the center of the hatch approx 12mm back from the rear edge of the tender tank. Apply a hatch handle and also a hinge bolt along the rear of the hinges from a length of 0.20x0.30" rivet rod. The hatch should look something like this:

The Big Air Tank

The air tank on the tender is the air pressure storage tank for the Westinghouse Independent Direct air and Automatic air brake system. If your loco has an air compressor fitted on the boiler side, then you will need an air tank on the tender of this loco. You might have decided that the air brakes only operate the train brakes, and not the locomotive's brakes, the air tank is still needed. You have an air compressor, you need tank!. On some locos (like the Eureka for example) there is no air tank on the tender, but there is an air brake system. The air tank on Eureka is slung under the cab floor, just to the rear of the drive wheels. The tank in that location would not provide an ample supply of air for the brakes. Once the Westinghouse system was adopted, and retro-fitted to these 8-16-D locos, the air tanks were typically mounted to the rear deck of the tender (refer background for reason!).

On the tender there are two locations the air tank is usually located:

- For 1870s-1900 versions, the air tank rested on the very rear platform of the tender, above the coupling.
- For post 1900 version, the air tanks were moved atop the rear tender tank.

The length of air pipe to both locations was about the same, but the upper deck location of the later era provided a greater area to place larger air tanks.

We make the air tank out of 22mm diameter PVC pipe (electrical conduit). Cut the pipe to approx 75mm length. Cap the ends with 2mm styrene sheet. Use 5min araldite to hold the ends on. When dry, carefully cut around the pipe, tracing the pipe profile into the end caps. Finally sand the edges of the end caps to a nice rounded edge.

The air tank is mounted to the tender on a kind of 'cradle' I made the cradle out of a 70mm length of 10mm wide Plastruct 'H' beam. Run the beam horizontally and the tank just rests nicely into the beam recess. The tank will need two straps applied to the outside...these straps clamp the tank to the cradle in real life. Make the straps out of lengths of 2mm wide 0.5mm styrene. Wrap the straps right round the tank from base of cradle back to base of cradle. Later in this section you will attach the air inlet and outlet pipes to this tank. Drill two 1.5mm holes in the exact center of the tank ends, one on each end. You'll insert 1.5mm brass rod into these holes. Around the hole where the pipe enters the tank, you can weld some small rivets for added detail. Your finished tank will look like this, however do not weld the tank into place yet...the location is era dependant:

Note the dark gray plastruct beam used as a cradle.

Modeling the Eras

1870s-1900 Coal Tender

The early coal tender has the air tank mounted on the rear deck, with the air supply pipe running to the tank along the frame side, under the deck. Install the tender air tank as shown in this diagram. Connect a length of brass 1.5mm rod to both sides of the tender, running from the tank to a location near the tender front. **Where the 1.5mm brass rod enters the tank, insert a small hex nut at the interface to simulate the threaded pipe connections.** Near the front, the brass rod will do a 90 deg bend and turn into the side of the tender frame....do not glue the rod into the frame side, just press the rod into place, with about 1/4" running into the tender side. When you want to remove the tender shell for sound system battery replacement etc, you'll have to remember to press the brass rod air lines away from the frames. Check the diagram and see where the air pipe runs into the tender frame side. Repeat this air line to both sides of the tender...the engineer's side pipe is the supply air pipe, the fireman's side is the return air pipe to the cab.

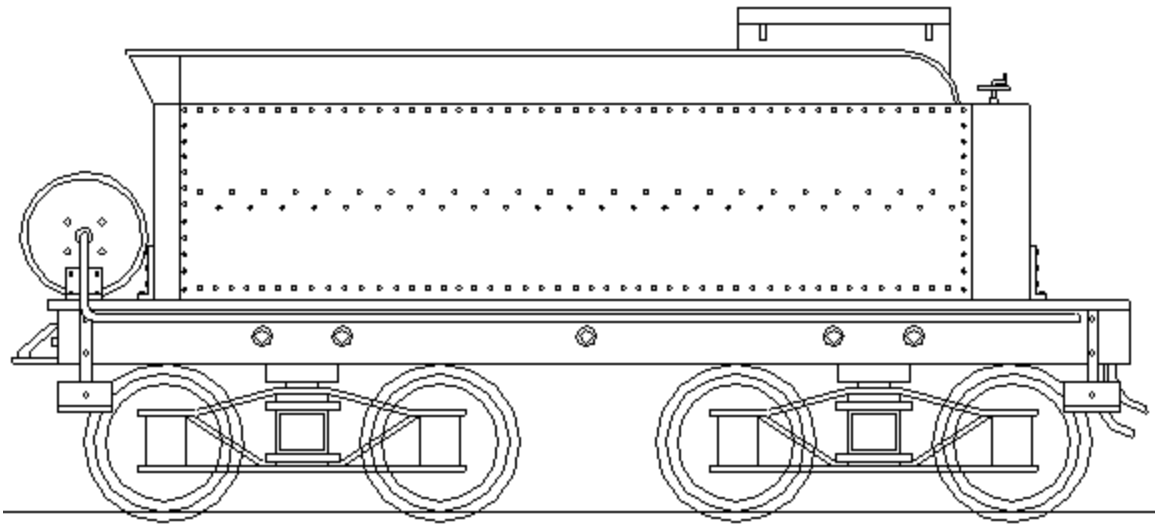

1870 -1880 COAL TENDER

Note the air pipe run in the above diagram.

The Tool Boxes

If you have some surplus tool boxes from the Bachmann 2-4-2 tender, you can use those, otherwise simply make the tool boxes from 1mm styrene. Make a 35mm long x 15mm tall, X 15mm wide box with a gabled roof (hatch). Add hinges to the gabled lids, in the same manner you made the hinges to the water tank hatch. These tool boxes are to be welded to the forward end of the tender top (see diagram above).

The Coal Load

The coal load can be as high or as low as you like. If you've made the full fuel bin area in the tender, then you may want to only fill that area i.e. a low coal level. If you've not made the fuel bin, then you can cover most of the top of the tender with a heap of coal. What I do is carve a coal load shape out of polystyrene. Glue the polystyrene load to the tender top where required with PVA, white glue. I then get a real chunk of anthrasitic black coal , put the coal chunk into an old sock and smash it all up with a hammer, until the coal is crushed into nice 4mm chunks. Using straight undiluted white glue, I brush a think layer of glue onto the polystyrene form, and apply the chunks of real coal over the form. Glue on about a 5mm thick layer of coal all over the polystyrene block. I like to make two mounds into the coal load, simulating how the coal was loaded.

If you want added hungry boards to the tender deck, go ahead and do so, you can use the same principle as the boards shown in the 'Wood Tender' instructions below.

The coal load could look something like this:

The coal load, and C&S style tool boxes at front (vertical doors facing the cab)

Note the two mounds in the coal load. This shape is formed first with a polystyrene base, 5mm lower than the finished coal load. The Hungry boards here are old C-16 boards, extended with styrene strips and welded rivets to the same pattern.

The 1870s Wood Tender

Mount the air tank and air lines as indicated above in the 'coal tender' description. Also provide tender mounted tool boxes as described above.

The Wood tender will look something like this:

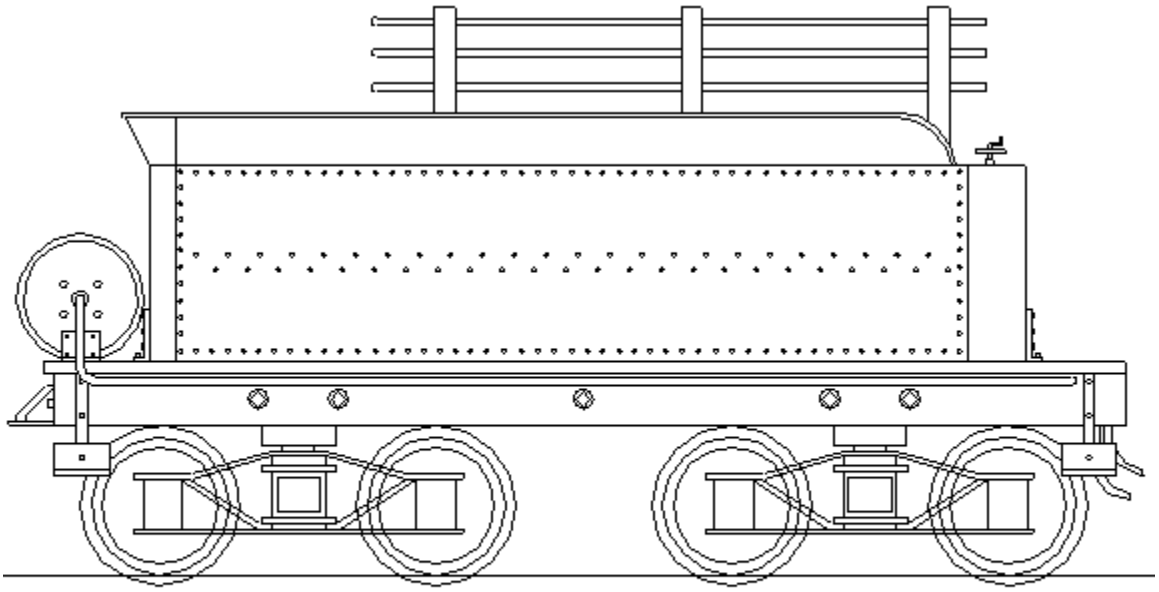

1870 WOOD TENDER

Making the Hungry Boards

There are a number of ways to make the hungry boards, depending on the look you want. Some hungry boards are literally like a wooden box on top of the tender, with no actual railings. Just solid wooden fences. Others are as shown under the 'coal' section, and are planks of wood held on iron frames. Then there is the all iron railing type (as shown in the above wood diagram).

To make the wooden boards type, you can make up fences out of strip wood and apply to the tender, or weld up fences in styrene, with welded rivet detail applied (see pic of coal tender).

The Iron railing type can be made using tiny 4mmx4mm 'H' section Plastruct rods as the supports. Use 1.5mm brass rods to form the railings. These railings run through 1.5mm holes drilled in the 'H' section supports.

The 'H' sections are installed into the tender top through 4mm holes. Run the support rods right down to the tender base. You can have the railing slanting outward (like the photos below) or vertical.

The wood load is small chopped up tree limbs. Each branch has about a 10mm diameter, cut into quarters. The length of each wood chunk is about 25mm. Glue into place using PVA, white glue.

The finished iron railings with wood load should look like this:

Note the 'H' section uprights (slanted outward) with 1.5mm brass rod inserted as railing.

The Oil Tender and Post 1900 Tender

For post 1900 coal and oil tenders, the big air tank is mounted on the upper rear tender deck.

The air lines to and from the air tank can either run down to the tender flare area and then run down to the chassis framing, near the front of the tender, or can run directly down from the air tank to the chassis framing, and forward under the deck. Again cut the end of the brass 1.5mm rod into the side of the frame near the front end (refer coal tender instructions). Where the 1.5mm brass rod enters the tank, insert a small hex nut at the interface to simulate the threaded pipe connections

The air lines running directly down from the air tank to the chassis sides will look like this:

The air lines running along the tender flare will look like this:

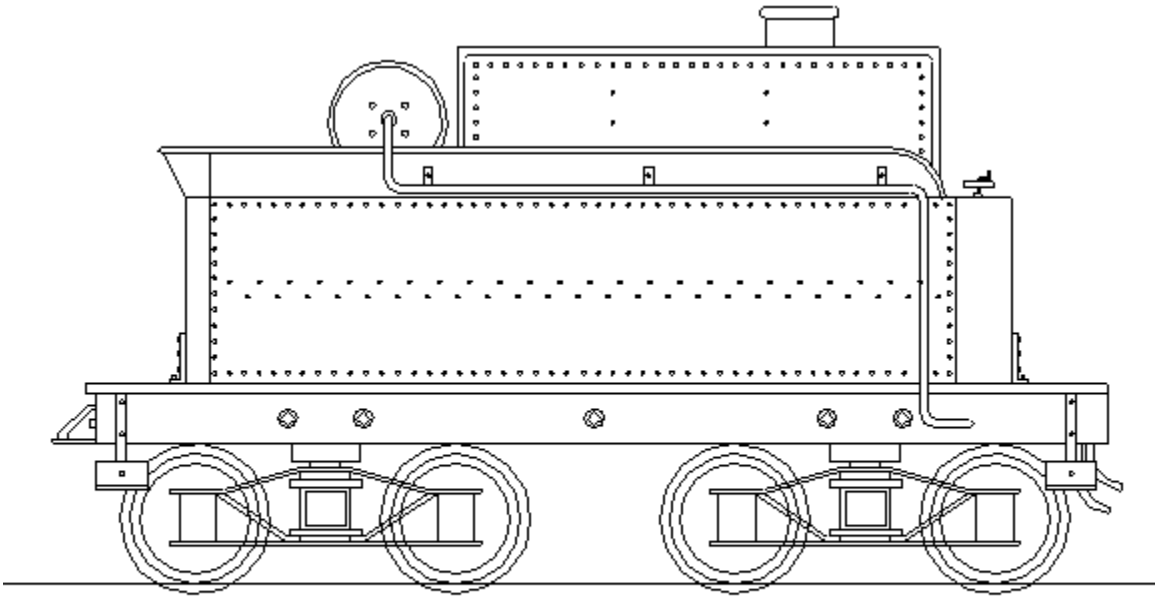

1920s MODERNISED OIL TENDER

Note the 3 tiny clips above the air line on the tender flare area. These simulate the cleats holding the pipe to the tender. We make those out of 2mm wide strips of 0.5mm styrene, with a rivet welded on.

The modern air tank with air lines cleated into place, will look like this:

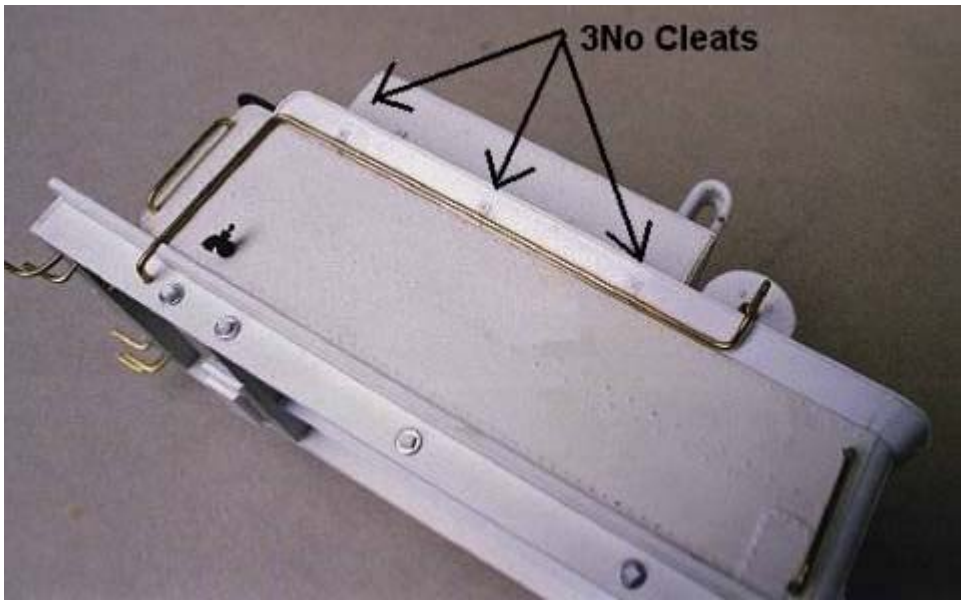

Note the 3 cleat details welded to the flare side. Also note the way the brass rod takes a 90 deg bend near the front end frame, and is pressed into the side of the chassis frame (do not glue here). The insertion of the air pipes is shown better in the next image:

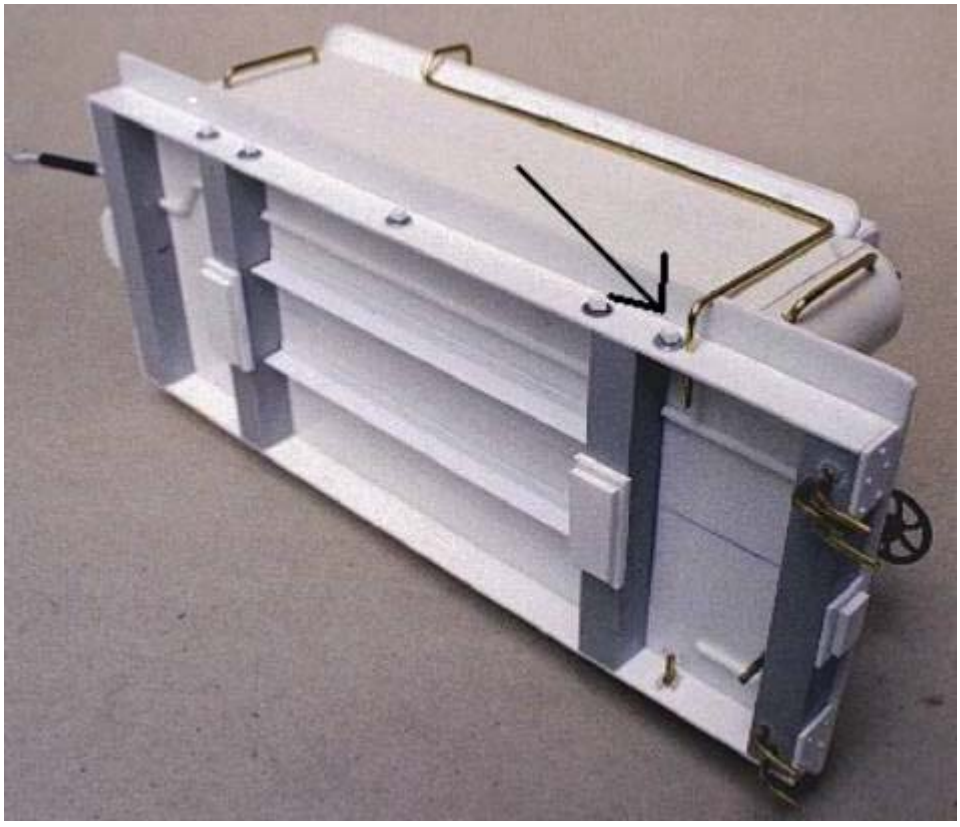

If your modern tender is to be loaded with coal, then refer back to the 'coal tender' section above for making the coal load. For oil tenders proceed....

Making the Oil tank

The oil tank is made in much the same manner as the tender shell. Basically a box made from 2mm thick styrene, with 0.5mm styrene cladding laminated to the outside. The 0.5mm cladding is to have rivet detail punched in from behind, in the same manner you made the tender shell. Also note that the cladding should be laminated using 5min epoxy, evenly applied to the 2mm substrate, before the oil tank box is formed up.

All the corners to the oil tank are made in the following way - The 2mm styrene panels are jointed at right angles, the corners are then sanded to radius the edges. The 0.5mm cladding will already have been applied, and will end 1mm shy of the rounded edges. The corner details, both vertical and horizontal are shown here:

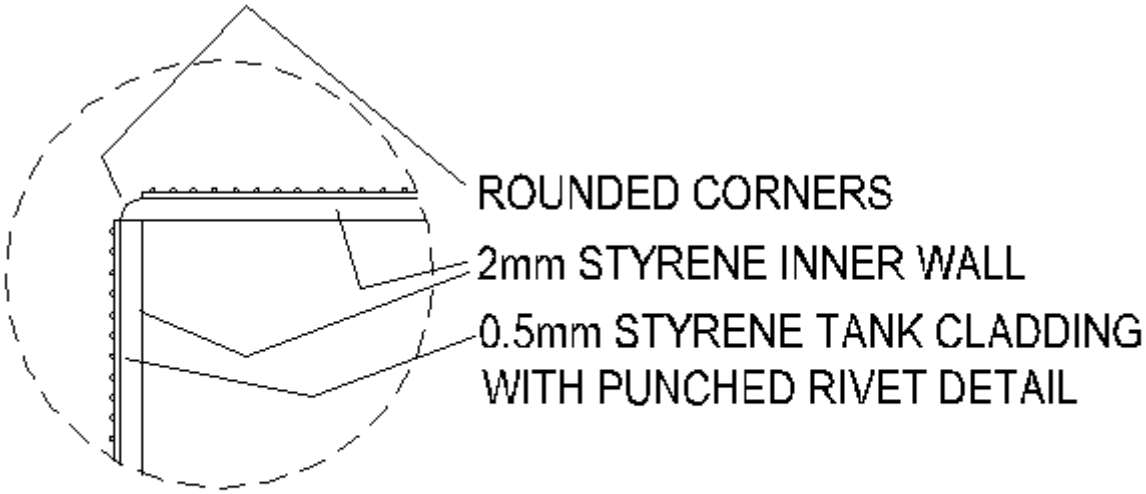

OIL TANK CORNERS

Note how the 0.5mm styrene cladding ends shy of the corners.

The oil tank on my sample locomotive was a 90mm long x 65mm wide x 25mm tall box. The tank was mounted approximately where the tender flare starts, refer to the elevation drawing above.

Oil Cap

The oil cap was made in an identical fashion to the water tank hatch.

The Oil Tank Hold Down Cleats

The hold down cleats are identical to the cleats used to hold the tender shell down to the chassis frame, there are 4 cleats to be made, which are welded to the lower oil tank sides.

The Air Vents

Most oil tanks should have an air vent. This lets the air out while the oil tank is being filled, preventing dangerous spatter occurring, especially when the tank is nearly full. There are lots of types of vents. The type I made for the prototype loco, were two 'snorkel' type 'U' shaped pipes,

made from 3mm styrene tube. Other types are single straight upstands with a cap atop. Vent placement also varies. Some are right next to and behind the filler cap, while others are to the rear, away from the cab and firebox.

The finished oil tank, with hold down cleats, air vents and filler cap looks like this:

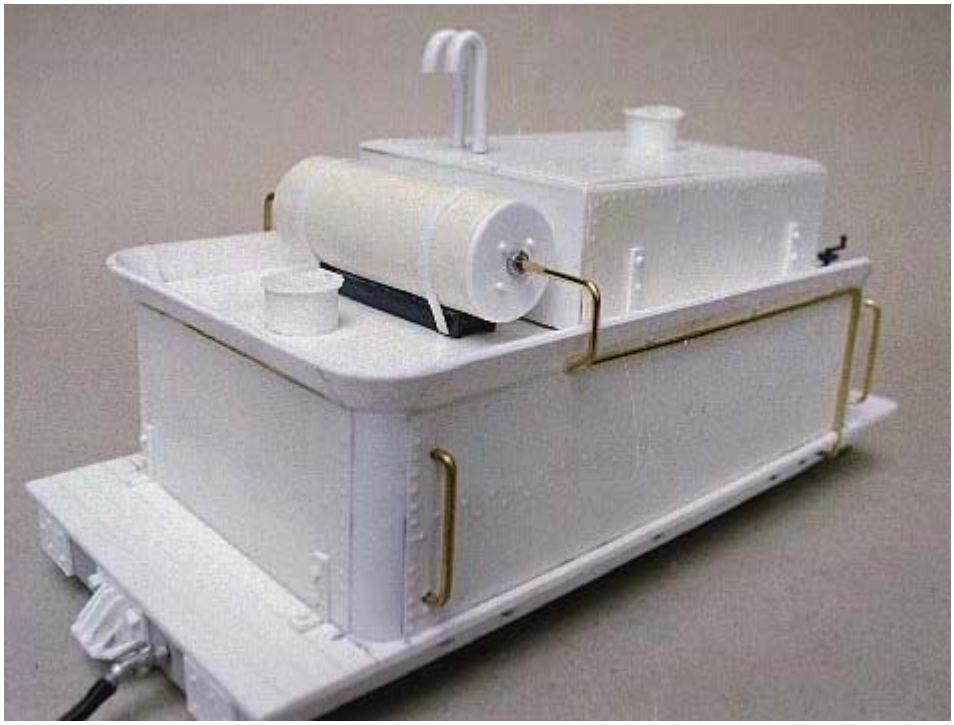

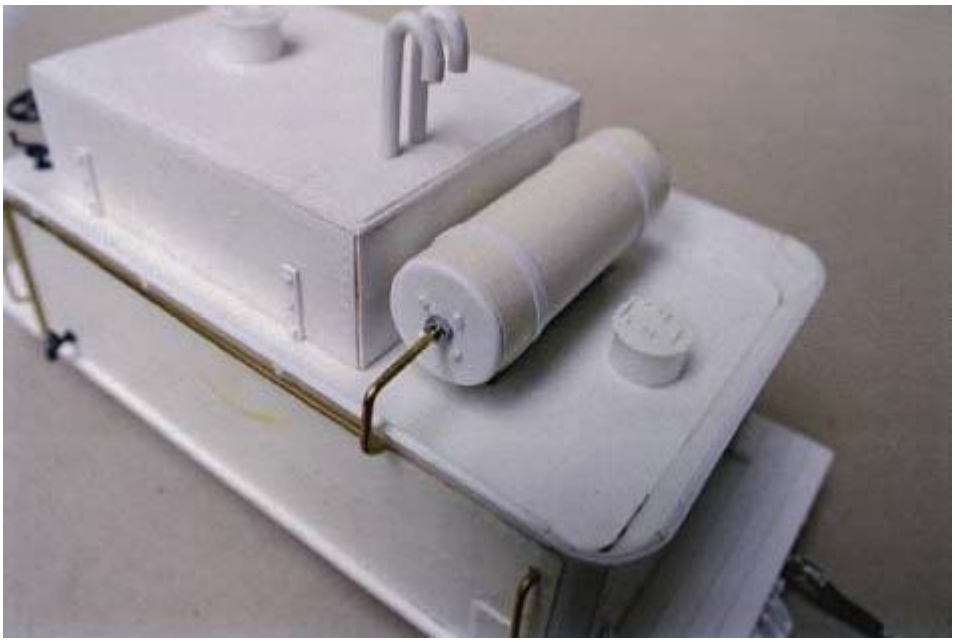

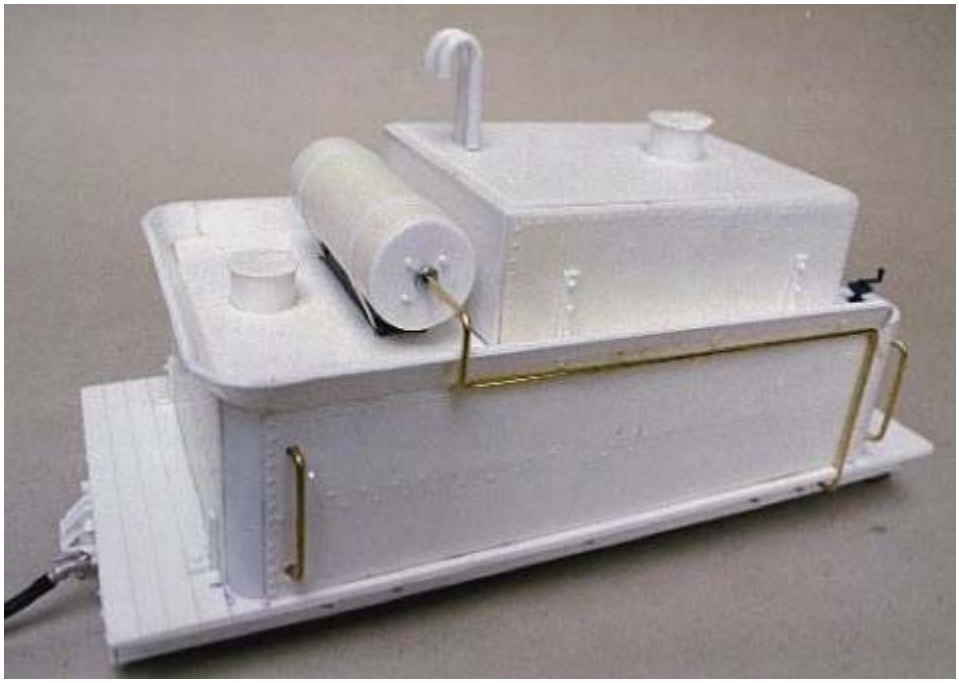

The Lifting Cleats

This an optional detail, but I think adds a lot to the model. In order for the oil tank to be lifted into place as a retro fit to the old 1870s tender, we can add the lifting cleats to the tank top. Naturally no two locos were quite the same in this regard, and some had no cleats at all.

I made the cleats by drilling a 2mm hole into 0.5mm styrene, and then cutting out a cleat around the hole. I welded 4 cleats to the tank top.

The oil tank with lifting cleats looks like this:

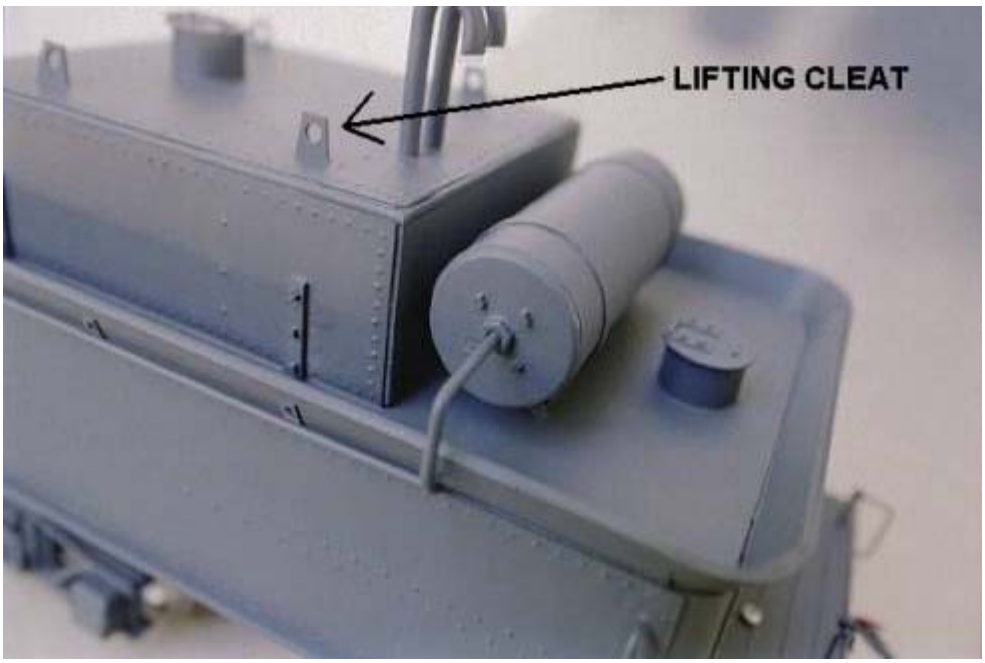

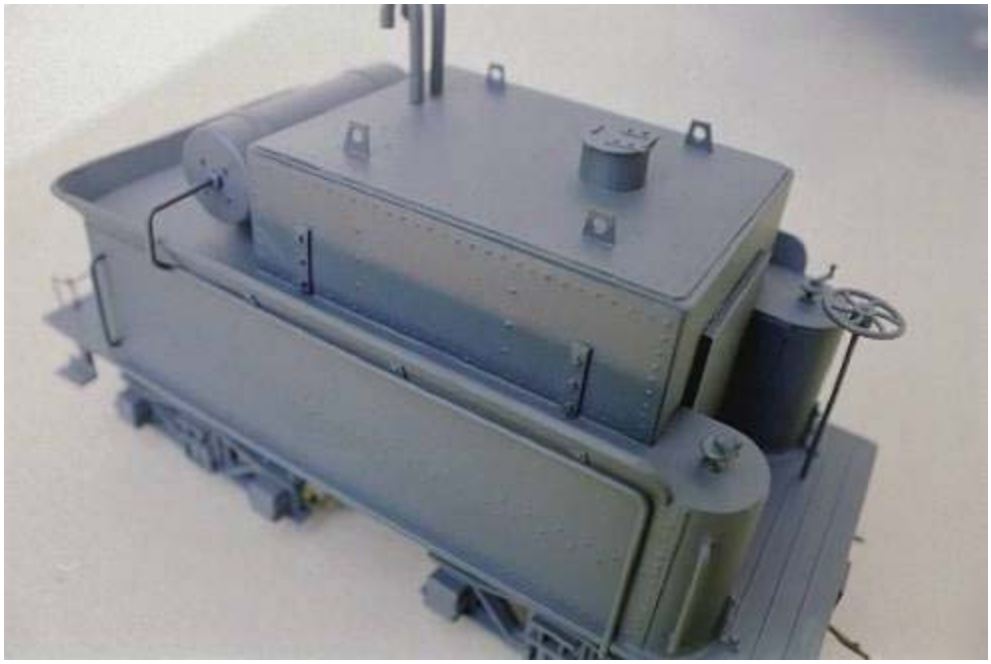

Note the 4 lifting cleats on the tank top in the above photo.

All Eras - Final Details

Under Floor Piping

After chapter 6, you might remember there were 3 pipes that terminated under the cab floor on the engineer's side...these were :

1. The water supply pipe to the RH Injector.
2. The Air pipe from the air compressor to the tender air tank
3. The Brake supply air line (Automatic Air - Train Brakes)

Under the Fireman's side cab floor, there were two pipes

1. The water supply pipe to the LH injector
2. The return air pipe from the tender air tank.

In addition to that, we will be adding the direct air or independent brake system for locomotive braking, to the tender (see later in this section).

All these pipes ended as a bunch of 1.5mm brass rods, cut off at the rear end of the cab. On the tender now, we have to install the other end of each of these pipes, and run them though to their final connection point.

If you run your locos on wide radius curves, you can in fact connect the tender hoses up properly, connecting the lines of the loco to the tender with black flexible rubber tubes (use model car fuel lines etc). If running the loco on tight curves, then you'll just have to leave a gap between the pipes on loco and tender.

The following diagram illustrates the pipes to be added under the tender floor.

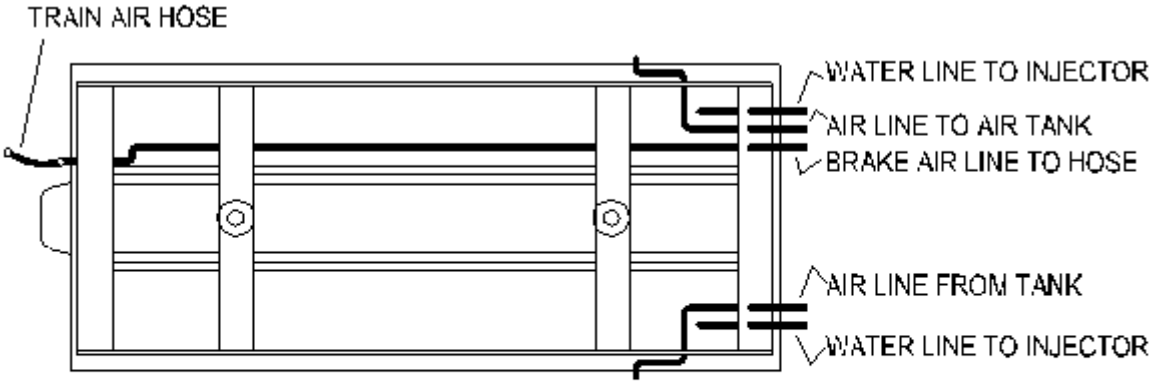

SUB FLOOR PIPEWORK

Here are the pipes shown under the floor of the Prototype loco.

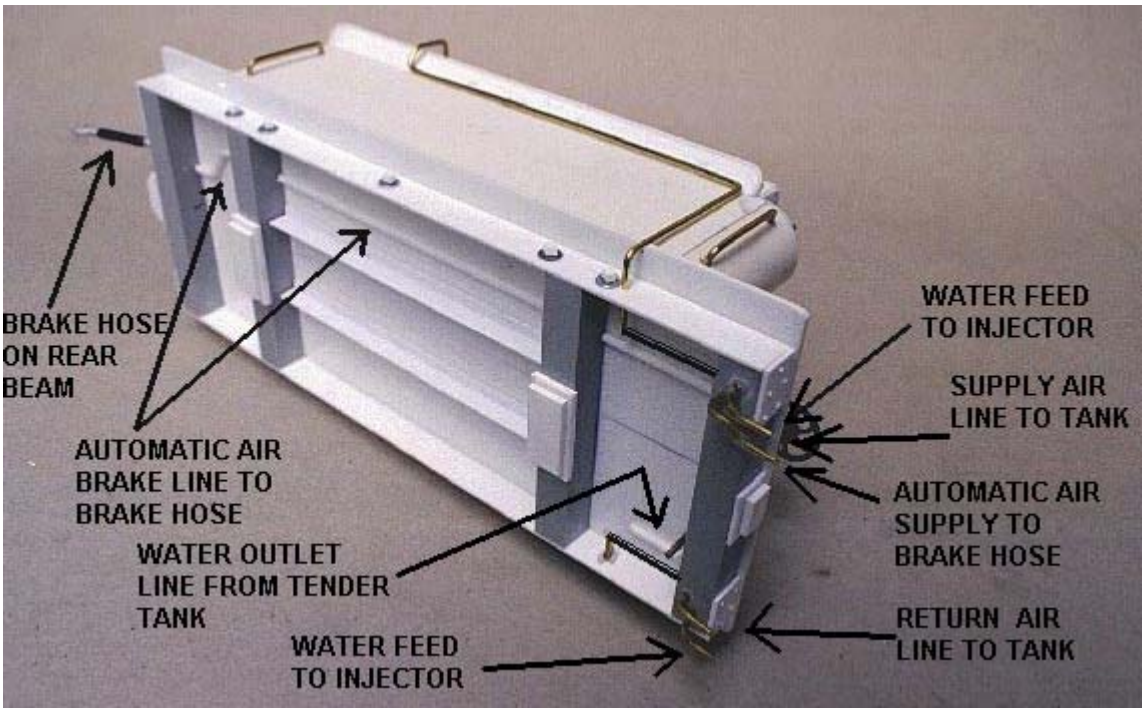

Note how each pipe at the draw beam of the tender, is simply an 'L' shaped bit of 1.5mm brass rod, inserted into the beam for a nice strong joint. The lengths of the 'L' shaped pipes varies, and should be adjusted to correspond to the location and height of the same pipes on the loco proper.

The relative pipes from tender and locomotive will look something like this:

Rear End Details

On the rear draw beam of the tender, we need to add but two more details.

The air hose

This can be an Ozarks air hose, as discussed in chapter 6, or a home made job, also shown in chapter 6. Basically install the air hose into the end beam on the engineer's side of the coupler. Locate the hose a sufficient distance away from the coupler to ensure the coupling does not snag the hose while rounding bends.

The Coupler Release Lever

The release lever is made from 0.75mm brass rod, bent into a 'U' shape. Three small 'L' shaped wire stanchions are made from the same rod, drilled and inserted into the top of the chassis beam. Place the 'U' shaped lever into the upstanding 'L' stanchions and bend the top of the 'L' down over the lever with pliers. The release lever is now held to the beam and can be rotated per prototype. We then bend a 10mm length of 0.75mm rod over the center of the release lever (directly above the coupler) and solder horizontally into position. When you lift the release levers at the end of the pilot beam, the central soldered rod will lift, simulating the lifting of the coupler pin to open the coupler.

Go ahead and screw your KD or Bachmann couplers on. Paint your tender now.

The Release lever and air brake hose fitted to the model looks like this:

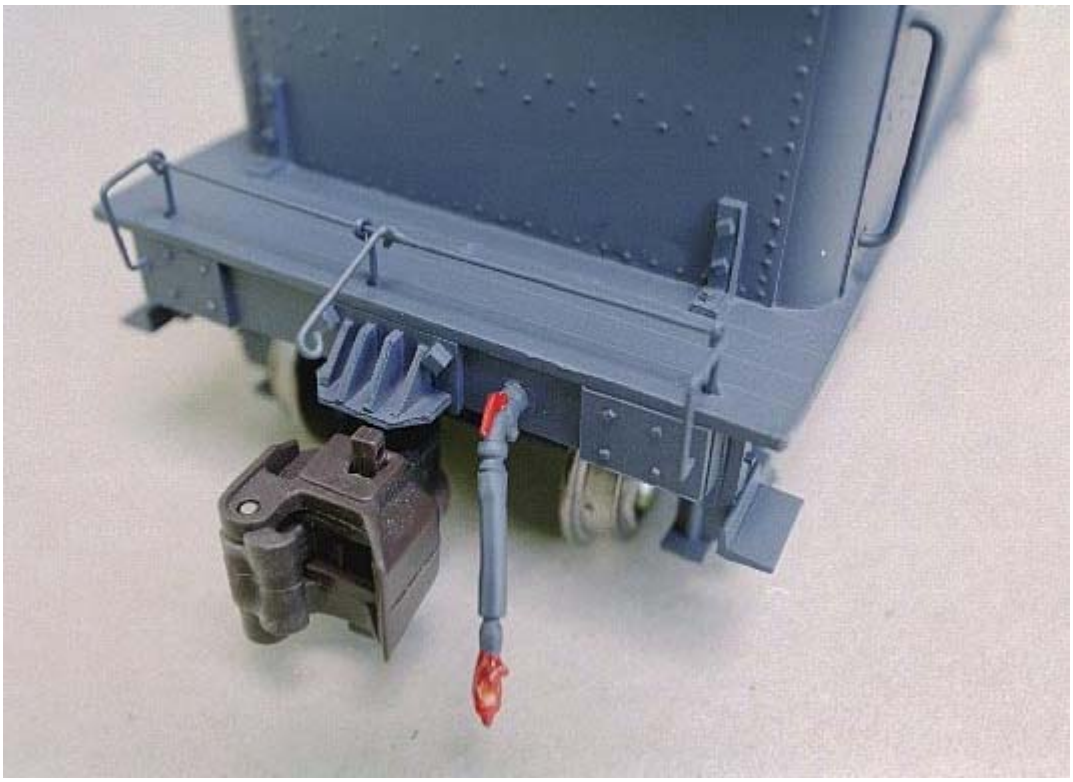

The Locomotive Independent Brake System

As reviewed in Chapter 6, typical American NG locos had two brake systems:

1. Automatic Air - Train only Brake system
2. Direct air or Independent Locomotive Air brake

In the steps above we fitted the air line from the loco to the rear air hose for the train brake system. In this step we add the air brake system to the tender chassis.

The tenders have their own brake system, and for several years, these small NG locos only had braking on the tender, no brakes on the drive wheels.

To simulate the independent air brake under the tender floor, we need to make a small brake cylinder, two levers and some tension rods. The tender on this loco is very small, and the tender trucks are close together. There isn't much room to fit this added detail. There are three options here:

1. Don't add this detail at all, its not easily seen, and could snag the tender wheels on tight curves.
2. Make only the brake cylinder under the floor, but no other levers and rods. Thus you'd make only what is seen hanging under the floor. The rods and levers would be out of sight.
3. Make the whole thing, and be happy its done right. Take care with the placement of the system to prevent binding with the wheels.

Make the brake cylinder in a similar way you made the air compressor in chapter 6. Use a 15mm length of 12mm dia Evergreen tube, cap the ends with 0.5mm styrene and add a rim of rivet heads to both sides. Place a smaller 5mm length of 6mm plastruct tube on one end of the brake

cylinder. Make two levers, and tension rods out of 1mm styrene strips. Weld the whole system flat against the bottom of the tender framing. Use a block of styrene between the brake cylinder and floor, to situate it at the right height. The overall appearance of the under floor brake system and air line running from cab to brake cylinder is as follows:

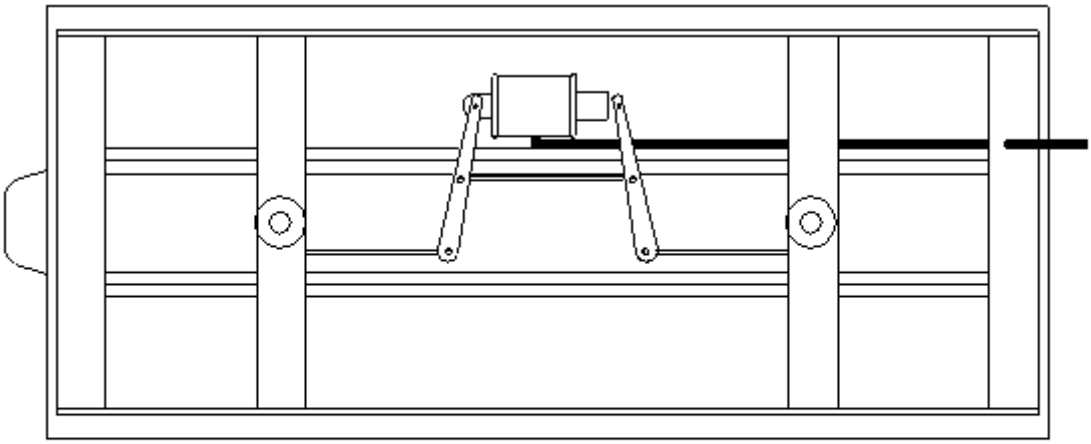

INDEPENDANT LOCO AIR BRAKE

Under the cab floor you will have to add the other end of this air pipe. The air pipe is a simple 'L' shaped pipe of 1.5mm brass rod, that will run straight to the independent brake stand, level with the backhead. Just end the pipe under the floor in line with the brake stand above.

The tender is now finished, except for some linking issues.

Hooking the Loco to the Tender

Making the Tender to Loco Coupling.

Time to screw the tender trucks on finally and make sure your tender shell is screwed down to the tender chassis.

In the rear of the old C-16 chassis, under the rear cab floor, you should still have a plastic post still firmly mounted to the frame directly behind the motor block. You will attach your tender coupling here. The coupling is simply a strip of 2mm thick styrene. Cut out a 25mm long x 10mm wide rectangle of 2mm styrene. On one end, drill a hole wide enough to insert the styrene coupling over the chassis post. On the tender end of the rectangle, drill two 4mm holes, one behind the other, providing a close coupling and normal coupling option. Place the coupler onto the post and insert a screw into the base of the post. Allow the coupling a bit of slop to pivot.

Under the tender draw beam, in the same line as all the 'L' pipes you fitted previously, insert a 3mm dia brass rod, to extend downward below the draw beam by about 12mm. Install this post in the exact centre of the draw beam. You can now successfully hook the tender to the loco. I'll leave the set out of the two holes in the coupling to you, as this set out affects the coupling distance of the tender relative to the loco, and depends on the curves you use. Generally I believe

manufacturers do not close couple their models enough, and in many cases much closer coupling is possible even on the tighter curves.

This 8-16-D 2-6-0 has the rear drive wheel so far under the cab that there is actually very little overhang of the cab over the curves. With that in mind, it is possible to close couple the tender to almost prototypical distances without a risk of the tender and loco binding on the curves...see pic above in the tender pipework section.

Electrical Connection

As stated often, there is insufficient electrical pick up on the 6 drive wheels of the loco to run the loco smoothly. The installation of electrical pick-ups on the tender wheels is essential in providing smooth operation. Seek out LGB or similar plunger pickups for mounting to the truck frames. You only need pick-ups on two axles, one on each truck. Some wheels can be purchased with ball bearing axles including integral pick-ups in the hub, if using these wheels, then you only need solder wires from the wheel hub back to the loco. The options are many, ask around for help if you are unable to get pick-ups on your trucks.

Assuming you know how to put electrical pick ups on the tender trucks, you need to find a mini plug and socket of a type that allows for two poles. Check Radio Shack or such places for a small plug. You need to connect the wires coming back from the loco's motor block to a plug, and the wires from the tender trucks to a socket. The loco's plug and wires should run down below the chassis framing to a point behind the 3rd driver on the engineer's side. Make sure the plug doesn't drag on the ground! On the tender draw beam, you can hang the wires and socket by simply suspending the wires in a 'U' shaped stirrup, inserted into the draw beam base. Take out the slack in the lines so no dragging occurs. Ensure that the polarity in the plugs and sockets match, so you don't short out the loco when you connect the tender!

Your tender should look something like this:

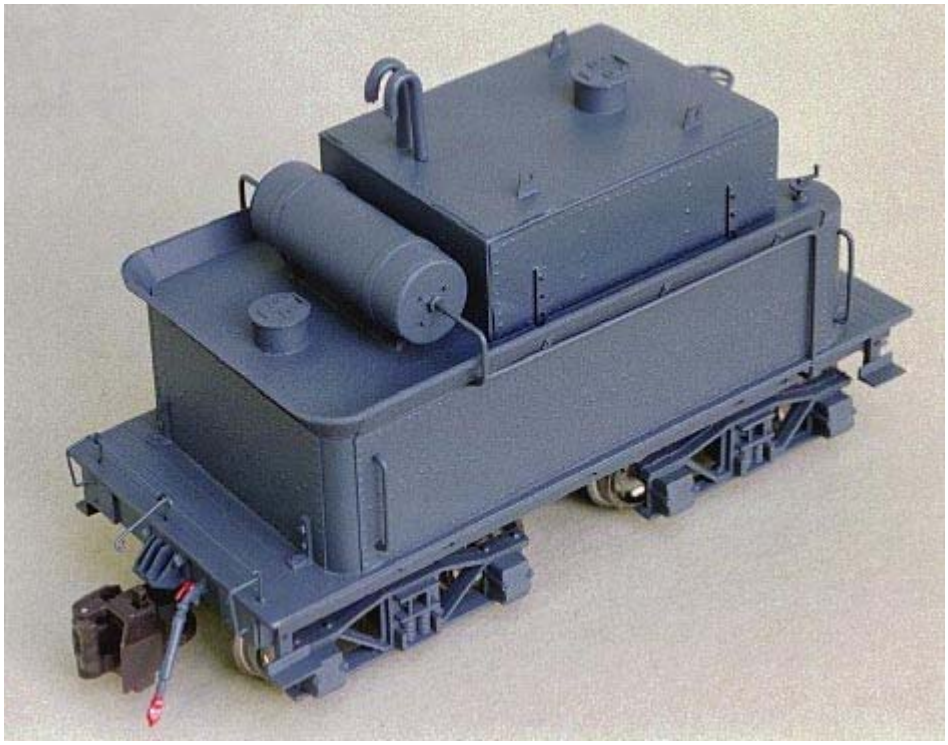

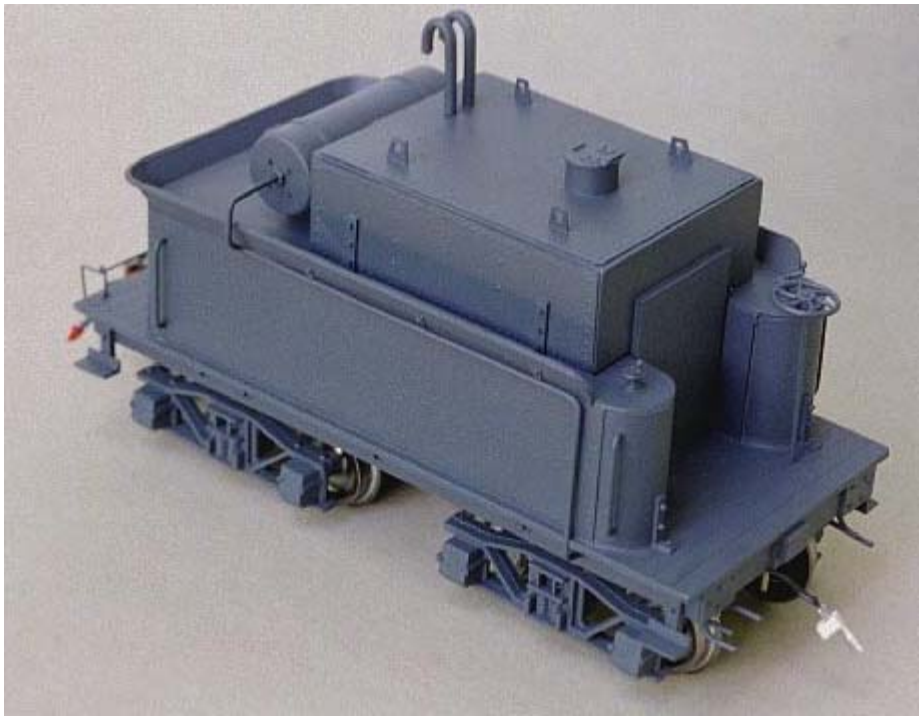

Note the small white electrical plug at the draw beam of the tender.

Check out all the tender detail...tank rivets, air pipe cleats, chassis frame bolts and washers, outlet tap to tender side and hand rails.

Note how the air pipe tucks into the side of the chassis frame.

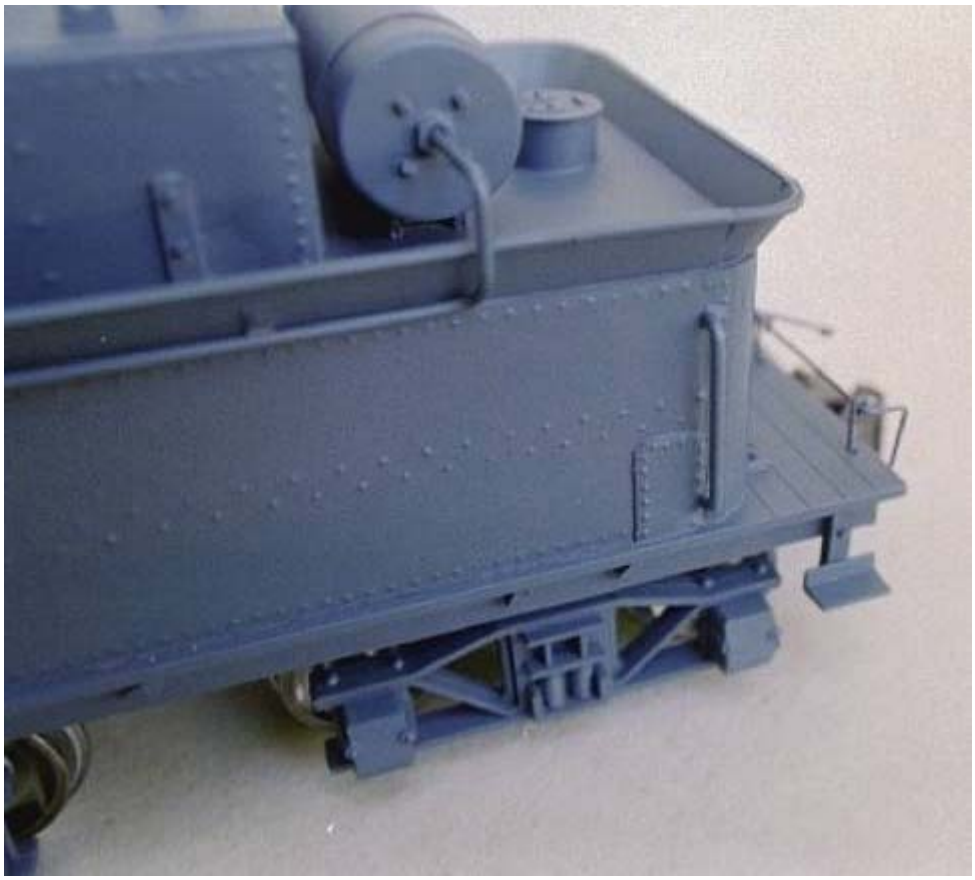

It is inevitable that some horrible error will occur when entirely scratch making something like this. I mentioned in the 'background' section that tenders tended to rust, and rust bad. Railroads worked hard to keep old tenders in service by patching the rust holes. Sometimes there were more patches than tender, patches on top of patches! I also stated, that patches are a cool detail to add to your tender, but not to design a patch into your model, until you finish the tender...reason? Mistakes can be so easily, and stylishly repaired by the addition of a patch! In the above picture I was forced to add one such patch to my tender shell, next to the hand rail,

above the chassis. I had a build up of welder cement in the corner where the cladding met the corner pipe. It took a couple of days for the melting of the cladding to become apparent. The welder distorted the joint to the pipe, where the build up had occurred. The answer? Whack on a patch! The patch is made from 0.5mm styrene, with a line of rivets embossed around the perimeter. Pretty cool eh?!

You can now take your loco outside and start running her....chaps...you are DONE!!

Final

In the final chapter (Chapter 8) we'll look at locomotive balancing and weighting, apply the decals and make the builder's plates. At the moment the builder's plates are installed, the locomotive crosses the finished mark. The builder's plates ceremony is not without pomp & circumstance, for this is the moment that a locomotive is born. Her eyes will open and a personality will come forth. It's the moment of truth. Stay tune for Chapter 8 and the Grand Finale. In the mean time, go out and test your loco, no more modeling to be done.

Ain't she gorgeous??!!

Well get into the tender chaps, and as always,

Good Luck!
David Fletcher